Makitech
Loaded with energy-saving technology

DRIVEN ROLLER CONVEYORS
BELT CONVEYORS

DRIVEN CONVEYOR

2020

MAKITECH Co., Ltd.

DRIVEN CONVEYOR 2020

MAKITECH Co., Ltd.

Considerate logistics …I 4.0

MAKITECH Co., Ltd.

http://www.makitech.co.jp
E-mail…info@makitech.co.jp

ISO certified factory

Yatomi Plant
ISO 9001 Certified
NORWEGIAN ACCREDITATION
Certificate no. 90065

※Please note that the product specifications may be changed without notice.

R0202A-4000 J.

MAKITECH
DRIVEN CONVEYOR

GENERAL CATALOG OF MAKITECH DRIVEN CONVEYORS

Before reading this catalog

Structure

The conveyor structures specified in this catalog are divided into [Steel type], [Aluminum type], and [Stainless type]. Depending on the purposes, they are further classified into [Roller conveyor series], [Belt conveyor series], [Chain conveyor series], [Light weight models], [Medium weight models], and [Heavy weight models].
Please refer to the list (pages 002 to 005), which shows all the types at a glance.

Products

The product specifications and designs specified in this catalog may be changed without notice for product improvement. Please check with our Sales Department at the time of inquiry or order.

Safety

Follow the precautions below for safe use.

■ Understand the Instruction Manual thoroughly, and use the product correctly.

■ Please be aware of the warning labels that are put on the dangerous parts of each product.

■ Never touch the conveyor when it is operating.

■ Never operate the product when the safety cover is removed.

■ Environment: Use the product in a place free of water. Do not use the product under explosive atmosphere.

■ Connect the ground wire to prevent electrical shocks.

■ Response to Electrical Appliances and Materials Safety Act (PSE)

The standard belt conveyors must be fixed and used in a stable state. When a product is to be moved and used in unspecified places, it falls under “movable type” electrical appliances and the PSE will be applied. Contact us for the products that conform to the technical standard of the law.

The PSE is a law enforced to regulate the manufacturing and sales of electrical appliances and to prevent danger and failure due to electrical appliances by promoting the spontaneous activity of private business operators to secure safety. Especially, electrical appliances that are directly connected to indoor wiring equipment of ordinary homes (directly receives electricity from the outlet) and require high safety are subject to the regulation.

DANGER	Cases where a user may be exposed to danger due to wrong handling, resulting in death or serious injury
CAUTION	Cases where a user may be exposed to danger due to wrong handling, resulting in medium or minor injury, and cases where only property may be damaged

Matters specified in “CAUTION” may also cause serious results depending on the situation. Follow all the notes as they include important things.

Operating environment

Temperature environment	0°C to 40°C (no freezing)
Humidity environment	85% or below (no condensation)
Altitude	1000 m above sea level or below
Installation place	Indoor (place free of direct sunlight and water)
Standard environment	No corrosive gas, explosive gas, vapor, etc.

*Make sure to connect the ground wire to prevent the motor and driver from being damaged by static electricity.

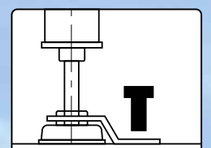

Fix the legs to the floor.

■Paint colors

Driven conveyor **Standard color S**
●Metallic silver
(silver color close to aluminum color)

Driven conveyor **Standard color G**
●Major green
S31-513 (Japan Paint Manufacturers Association Standard Paint Colors)
Close to Munsell symbol 2.5G 6/3

Air lift **Standard color (no symbol)**
●Orange
C12-60X (Japan Paint Manufacturers Association Standard Paint Colors)
Close to Munsell symbol 2.5YR 6/14

Gravity conveyor **Standard color G**
[M series]
●Major green
S31-513 (Japan Paint Manufacturers Association Standard Paint Colors)
Close to Munsell symbol 2.5G 6/3

Dangerous color
●C22-80X (Japan Paint Manufacturers Association Standard Paint Colors)
Close to Munsell symbol 2.5Y 8/14

*Please note that the color of the actual product may differ from the catalog because of the way it is printed.

Bringing dreams to the future for the next generation.

Blue ocean and green earth—
“Leaving this beautiful earth to the next generation” is a global task.
However, tasks given to the industrial field are not easy.
Makitech has been dealing with the tasks from the early stage and considering and performing things that can be done and must be done. The driven conveyors introduced in this catalog are sustainable and environmentally friendly. The products have excellent performance and durability with all the techniques and know-hows of Makitech reflected. The manufacturing process and recycling at the time of disposal are also eco-friendly. The products exhibit the industry-leading degree of perfection and cost performance.
The quality of our products is highly evaluated by various domestic and foreign industries. From now on, we will further be combining the knowledge and effort as an enterprise that brings the beautiful earth environment to the future.

www.makitech.co.jp

Steel conveyor

Roller conveyor

Chain transmission series (medium weight model)

■Straight

KR-384010S ····· P.007
KR-574010S ····· P.007
KR-604010S ····· P.007
KR-384010SW ····· P.008
KR-574010SW ····· P.008

■Curved

KTR-900S ····· P.009
KTR-1200 ····· P.010

Chain transmission series (heavy weight model)

■Straight

KR-605011S ····· P.011
KR-765013S ····· P.012
KR-766009S ····· P.012
KR-605011SW ····· P.013
KR-765013SW ····· P.013

Accumulation function series (medium weight model)

■Straight

MAC-CS384010S ··· P.014
MAC-CS574010S ··· P.014
MAC-CS604010S ··· P.014
MAC-G605010S ··· P.015

Accumulation function series (heavy weight model)

■Straight

MAC-H766009S ····· P.016

Belt transmission series (medium weight model)

■Straight

MMC-DR-38 ····· P.017
MMC-DR-57 ····· P.017
FLY-E38 ····· P.020
FLY-E57 ····· P.020

■Curved

MMC-TC ····· P.018

■Branching/merging

MJB ····· P.019
MJG ····· P.019

Motor roller transmission series (medium weight model)

■Straight

DC-57A ····· P.021
DC-57B ····· P.021
DC-38D ····· P.022
DC-57D ····· P.023
DC-57AQ ····· P.023

Belt conveyor

Medium weight model

■Straight

LBC-1 ····· P.024
MBC-1 ····· P.025
WBC-1 ····· P.026

Chain conveyor

Medium weight model

■Straight

SCC-40A ····· P.027 SCC-40B ····· P.028

Option

Option

■Guide/legs/conveyor parts

Guide/legs/conveyor parts ····· P.029～P.031

MAKITECH DRIVEN CONVEYOR

Aluminum frame conveyor

Chain conveyor

Chain transmission series (medium weight model)

■Straight

BAC-0 ····· P.035 BCT ····· P.038
BAC-60 ····· P.035 BCT-0 ····· P.038

Chain transmission series (heavy weight model)

■Straight

FDC-1 ····· P.036 BDC-1 ····· P.037
FDC-2 ····· P.036 BDC-2 ····· P.037

Accumulation function series (medium weight model)

■Straight

BCK-0 ····· P.033 BCB-50 ····· P.034
BCK-60 ····· P.033 BCB-60 ····· P.034
BCB-40 ····· P.034

Option

Option

■Guide/legs

GB-1･GB-3･GB-4･GB-5 /JLK･2FB･ALK ····· P.039

Belgotch

Belt conveyor

Light weight model

■Straight 34-frame

TYPE 34-N1 ····· P.041 TYPE 34-J1 ····· P.049
TYPE 34-S1 ····· P.042 TYPE 34-JG1 ····· P.050
TYPE 34-G1 ····· P.043 TYPE 34-S2 ····· P.051
TYPE 34-H1 ····· P.044 TYPE 34-G2 ····· P.052
TYPE 34-T1 ····· P.045 TYPE 34-D2 ····· P.053
TYPE 34-V1 ····· P.046 TYPE 34-V2 ····· P.054
TYPE 34-RG1 ····· P.047 TYPE 34-RG2 ····· P.055
TYPE 34-K1 ····· P.048 TYPE 34-K2 ····· P.056

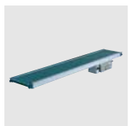

■Straight 60-frame

TYPE 60-S1 ····· P.057 TYPE 60-S2 ····· P.060
TYPE 60-G1 ····· P.058 TYPE 60-G2 ····· P.061
TYPE 60-SZ1P ····· P.059
TYPE 60-GZ1P ····· P.059

Medium weight model

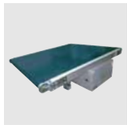

■Straight 90-frame

TYPE 90-S1 ····· P.062 TYPE 90-S2 ····· P.064
TYPE 90-G1 ····· P.063

Bulk solids conveyor

■Slope

TYPE 60-ZD2 ····· P.065 TYPE 120-ZD2S ····· P.066

Others

Others

■Option

Belt ····· P.067 Guide ····· P.075
Legs ····· P.069 Optional parts ····· P.077

ARAEEL

Belt conveyor

Light weight model

■AR40

AR40-S1 ····· P.081 AR40-S2 ····· P.083
AR40-G1 ····· P.081 AR40-G2 ····· P.083
AR40-U1 ····· P.082

Medium weight model

■AR60

AR60-S1 ····· P.084 AR60-U1 ····· P.085
AR60-G1 ····· P.084

Others

Light weight model

■Plastic belt

AR12-P ····· P.086 AR12-PC ····· P.087

■Resin top chain

AR12-TD ····· P.088 AR12-TC ····· P.088

Medium weight model

■Roller type

AR12-KD ····· P.089 AR12-RC ····· P.090
AR12-MA ····· P.089

Others

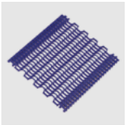

■Option

Belt ····· P.091 Stand/others ····· P.098
Guide ····· P.097

Vertical conveyor/perpendicular conveyor

Vertical conveyor

■Case conveyor

MCZ-100·MCC-100 ··· P.100 MCZ-250·MCC-250 ··· P.102

■Pallet conveyor

MPZ-500 ····· P.102 MPC-1000 ····· P.104
MPC-500 ····· P.102 MPZ-1500 ····· P.106
MPZ-1000 ····· P.104 MPC-1500 ····· P.106

■Clean environment type

MCPZ-12 ····· P.108 MCPC-12 ····· P.108

Vertical lifter

■Reciprocating vertical conveyor

BEL ····· P.110 JEL-200 ··· P.112 JEL-1000 ··· P.113
JEL ····· P.111 JEL-500 ··· P.113

Table lifter

Hydraulic elevating/lowering lifter

TH1-0306A ····· P.122 THD1-1509A ····· P.129
TH1-0312A ····· P.122 THD1-1510A ····· P.130
TH1-0506A ····· P.123 THD1-1512A ····· P.130
TH1-0508A ····· P.123 TH1-2004A ····· P.131
TH1-0512A ····· P.124 TH1-2004C ····· P.131
TH1-0706A ····· P.124 THD1-2009A ····· P.132
TH1-1004C ····· P.125 THD1-2010A ····· P.132
TH1-1006A ····· P.125 THD1-2012A ····· P.133
TH1-1006B ····· P.126 THD1-2015A ····· P.133
TH1-1008A ····· P.126 THD1-3012A ····· P.134
TH1-1008B ····· P.127 THD1-3015A ····· P.134
TH1-1012A ····· P.127 TH2-0512A ····· P.135
TH1-1012B ····· P.128 TH2-0516A ····· P.135
THD1-1504A ····· P.128 TH2-1012A ····· P.136
TH1-1504C ····· P.129 TH2-1016A ····· P.136

Hydraulic low floor lifter

THL-0506 ····· P.141 THL-1006 ····· P.141

Conduction table lifter

MAX-TS ····· P.142

List of models by conveyor

Air lift

Standard air lift

ALB-MB-N ····· P.146 ALB-WB ····· P.149
ALB-SB ····· P.147 ALB-WB-H ····· P.150
ALB-SB-H ····· P.148

Air lift with parallel link

ALB-TBL-N ····· P.151 ALB-HB-N ····· P.153
ALB-TBL-WN ····· P.152 ALB-HB-WN ····· P.154

Air lift with rollers

ALR-PR-57W ····· P.155 ALR-PR-57D ····· P.158
ALR-PR-57M ····· P.156 ALR-PRL-57D ····· P.159
ALR-PR-57H ····· P.157

Air lift with wheels

ALW-36 ····· P.160

Air lift with ball casters

ALB-BB ····· P.161

Electric air lift

ADL ····· P.162

Mold replacement system

Mold replacement system

MQMC ····· P.169 MQDC ····· P.169
Cart equipped with batteries ····· P.176
Die cart & mold cart ····· P.178

Robot system

Palletizing robot system

M-410iB ····· P.180

Fist robot

M-2iA ····· P.183
M-3iA ····· P.183

STEEL CONVEYOR

STEEL CONVEYOR

CONTENTS

Steel conveyor

Medium weight model
ϕ38~60
●Chain driven roller conveyor (1)
KR P007~008

Heavy weight model
ϕ60~76
●Chain driven roller conveyor (2)
KR P011~013

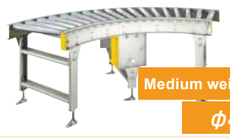
Medium weight model
ϕ42~
●In-chain driven tapered roller conveyor
KTR-S P009

Medium weight model
ϕ42~
●Out-chain driven tapered roller conveyor
KTR-SW P010

Medium weight model
ϕ38~60
●Chain driven accumulation roller conveyor (1)
MAC-CS P014
MAC-G P015

Heavy weight model
ϕ76
●Chain driven accumulation roller conveyor (2)
MAC-H P016

Medium weight model
ϕ38~57
●Round belt driven conveyor
MMC · MJ P017~019

Medium weight model
ϕ38~57
●Flat belt driven conveyor
FLY-E P020

Medium weight model
ϕ38~57
●Systematic roller conveyor (motor rollers)
SST-DC P021~023

Medium weight model
●Belt conveyor
LBC · MBC P024~026
WBC

Medium weight model
●Chain conveyor
SCC-40A P027
SCC-40B P028

●Option
Guide/legs
Conveyor part
Auto tensioner
Electrical duct
Standard sensor
Reinforcement pipe
GK · JLK · 2FB
OT ·JKW · JUD P029~031
JHP

KR Chain driven roller conveyor

Steel | Chain transmission | Medium weight model | Standard series

Bestseller of the KR series proven by records and reliability!
Wide variation of roller outer diameters from 38 mm to 60 mm.

*KR-574010S

■ Guide list of combinations of machine length, speed, and output

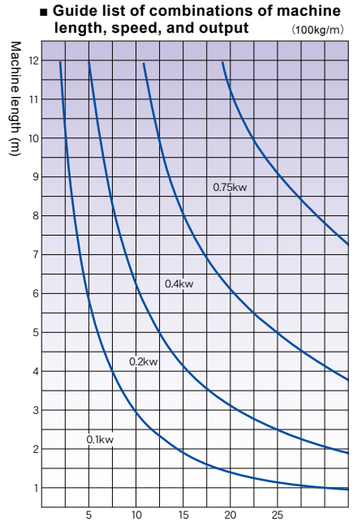

*The rolling friction coefficient of things carried on a conveyor is set to 0.05.

S drive

KR-574010S

(Unit: mm)

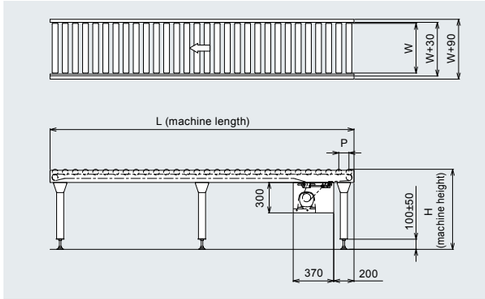

■ Specifications

(Unit: mm)

Model	KR-384010S	KR-574010S	KR-604010S
Drive system	Chain drive (#40)	Chain drive (#40)	Chain drive (#40)
Roller dimensions (outer dia. × thickness × shaft dia.)	38.1 × 2.3 × 12 (with plating)	57.2 × 2.1 × 12 (with plating)	60.5 × 2.3 × 12 (with plating)
Roller width (W)	100 to 1,000 (increments of 50)	100 to 1,000 (increments of 50)	100 to 1,000 (increments of 50)
Roller pitch (P)	50 75 100	75 100 150	75 100 150
Frame dimensions	[120×30×t 3.2	[120×30×3.2	[120×30×3.2
Sprocket (roller part)	#40×10TS	#40×10TS	#40×10TS
Machine length (L)	max12,000	max12,000	max12,000
Machine width	Roller width + 90	Roller width + 90	Roller width + 90
Machine height (H)	min450	min450	min450
Transport capacity (kg/m)	max100	max100	max100
Transport velocity V (m/min)	max25	max25	max25
Motor output (kW)	0.1 0.2 0.4 0.75	0.1 0.2 0.4 0.75	0.1 0.2 0.4 0.75
Power	200 VAC (three phase)	200 VAC (three phase)	200 VAC (three phase)

*The above specifications may change depending on the combination of the use conditions.
*Contact us for other available specifications besides the standard.

KR-384010S

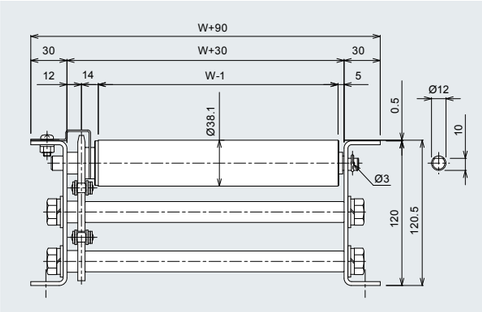

KR-574010S

(Unit: mm)

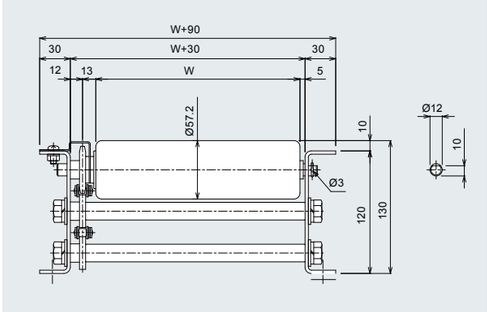

KR-604010S

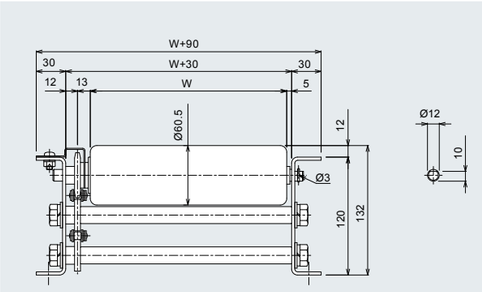

KR-384010SW

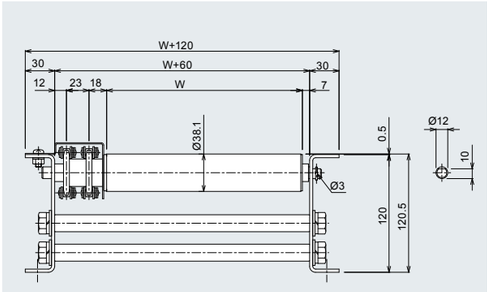

KR-574010SW

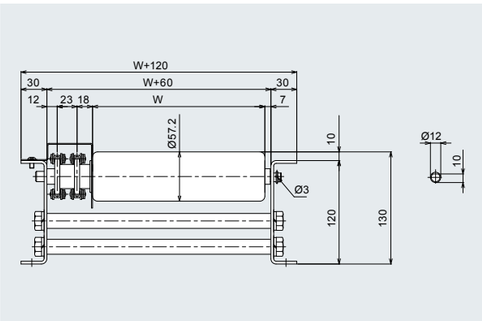

■ Specifications

(Unit: mm)

Model	KR-384010SW	KR-574010SW
Drive system	Chain drive (#40)	Chain drive (#40)
Roller dimensions (outer dia. × thickness × shaft dia.)	38.1 × 2.3 × 12 (with plating)	57.2 × 2.1 × 12 (with plating)
Roller width (W)	100 to 1,000 (increments of 50)	100 to 1,000 (increments of 50)
Roller pitch (P)	57 75 100	75 100 150
Frame dimensions	[120×30×3.2	[120×30×3.2
Sprocket (roller part)	#40×10TSW	#40×10TSW
Machine length (L)	max5,000	max5,000
Machine width	Roller width + 120	Roller width + 120
Machine height (H)	min450	min450
Transport capacity (kg/m)	max100	max100
Transport velocity V (m/min)	max25	max25
Motor output (kW)	0.1 0.2 0.4 0.75	0.1 0.2 0.4 0.75
Power	200 VAC (three phase)	200 VAC (three phase)

*The above specifications may change depending on the combination of the use conditions.
*Contact us for other available specifications besides the standard.

■ SW chain pitch and actual roller pitch

(Unit: mm)

Nominal pitch P	Actual pitch #40 (chain used)
57	57.15
75	76.2
100	101.6
150	152.4

SW drive

KTR-S In-chain driven tapered roller conveyor

Steel | Chain transmission | Medium weight model | Standard series

Inner drive type curved conveyor.
It can be arranged at the same machine width as KR-574010S etc.

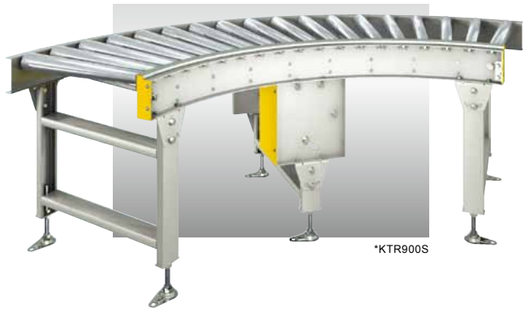

KTR900S(90°)

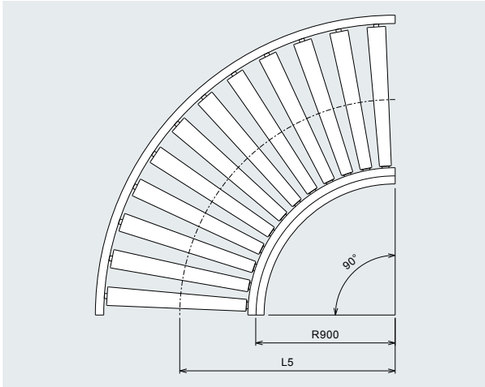

KTR-574010S

(Unit: mm)

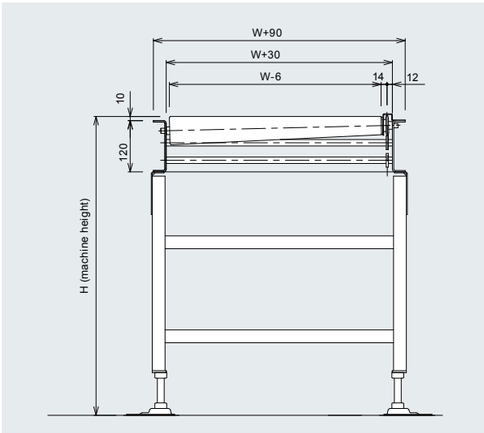

KTR900S (30° branch)

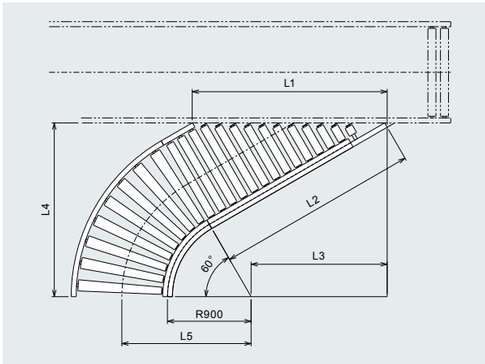

■ Specifications

(Unit: mm)

Model	KTR900S
Drive system	Chain drive (#40)
Roller dimensions (small dia. × large dia. × shaft dia.)	42.7 × 56 to 75 × 12 (round bars)
Roller width (W)	300 to 700 (increments of 100)
Roller pitch (P)	▲75 ▲100
Frame dimensions	[120×30×3.2
Sprocket (roller part)	#40×10TS
Inside radius of curve (R)	900
Machine width	Roller width + 90
Machine height (H)	min450
Transport capacity (kg/unit)	max100
Transport velocity V (m/min)	max25
Motor output (kW)	0.2
Power	200 VAC (three phase)

▲ Nominal center pitch (the roller center pitch of the curve changes by the size of the roller width).
*Contact us for other available specifications besides the standard.

(Unit: mm)

W \ Item	L1	L2	L3	L4	L5
300	735	924	365	1,241	1,073
350	835	1,010	440	1,284	1,098
400	935	1,097	515	1,328	1,123
450	1,035	1,183	590	1,371	1,148
500	1,135	1,270	665	1,414	1,173
550	1,235	1,357	740	1,458	1,198
600	1,335	1,443	815	1,501	1,223
650	1,435	1,530	890	1,544	1,248
700	1,535	1,616	965	1,588	1,273

■ Roller diameter (small dia. - large dia.)

(Unit: mm)

Roller width (W)	KTR900S (Inside radius of curve (R))
300	Ø42.7・Ø56
400	Ø42.7・Ø60
500	Ø42.7・Ø65
600	Ø42.7・Ø70
700	Ø42.7・Ø75

KTR-SW Out-chain driven tapered roller conveyor

Steel | Chain transmission | Medium weight model | Standard series

Outer drive type curved conveyor. Various curve R sizes are available.
A model with suitable specifications can be selected.

*KTR-574010SW

KTR-574010SW

(Unit: mm)

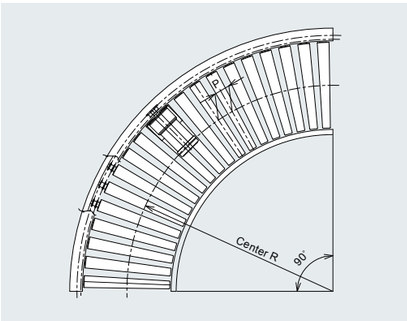

KTR-574010SW

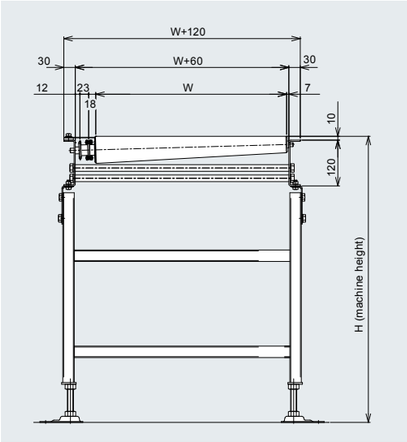

■ Roller diameter (small dia. - large dia.) (Unit: mm)

Roller width (W)	KTR-1200
200	52.1—61.9
300	49.7—64.3
400	47.3—66.7
500	45—69.2
600	45—74
700	—
800	—
900	—
1,000	—
1,100	—
1,200	—

■ Specifications (Unit: mm)

Model	KTR-1200
Drive system	Chain drive (#40)
Roller dimensions (small dia. × large dia. × shaft dia.)	52 to 45 × 62 to 74 × 12 (with plating)
Roller width (W)	200 to 600 (increments of 100)
Roller pitch (P)	75 100 150
Frame dimensions	[120×30×3.2
Sprocket (roller part)	#40×10TSW
Curve center radius (R) × angle	1,200×90°60°45°
Machine width	Roller width + 120
Machine height (H)	min450
Transport capacity (kg/unit)	max100
Transport velocity V (m/min)	max25
Motor output (kW)	0.2
Power	200 VAC (three phase)

*The roller pitch may change depending on the chain pitch.
*Contact us for other available specifications besides the standard.

KR Chain driven roller conveyor

Steel | Chain transmission | Heavy weight model | Standard series

Stably carries heavy things.
Conveyor with records and reliability.

*KR-895013S

■ Guide list of combinations of machine length, speed, and output (500 kg/m)

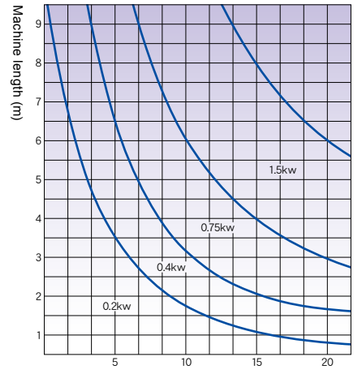

*The rolling friction coefficient of things carried on a conveyor is set to 0.05.

KR-605011S

(Unit: mm)

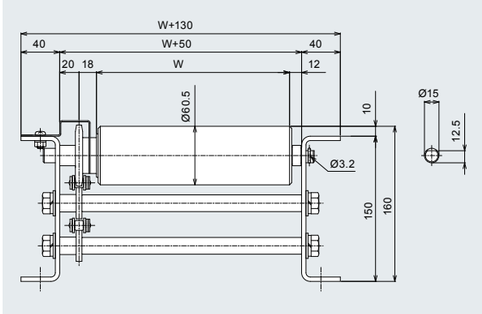

S drive

■ Specifications (Unit: mm)

Model	KR-605011S
Drive system	Chain drive (#50)
Roller dimensions (outer dia. × thickness × shaft dia.)	60.5 × 3.8 × 15 (no plating)
Roller width (W)	100 to 1,000 (increments of 50)
Roller pitch (P)	75 100 150
Frame dimensions	[150×40×4.5
Sprocket (roller part)	#50×11TS
Machine length (L)	max9,000
Machine width	Roller width + 130
Machine height (H)	min500
Transport capacity (kg/m)	max500
Transport velocity V (m/mm)	max20
Motor output (kW)	0.2 0.4 0.75 1.5
Power	200 VAC (three phase)

*The above specifications may change depending on the combination of the use conditions.
*Inverter control (slow start/slow down) is recommended for carrying heavy things.
*Contact us for other available specifications besides the standard.

KR-765013S

(Unit: mm)

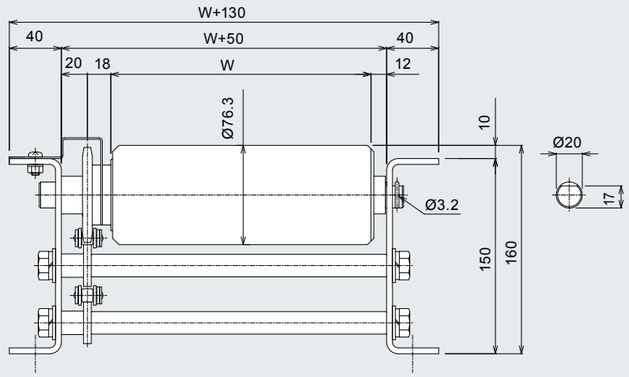

KR-766009S

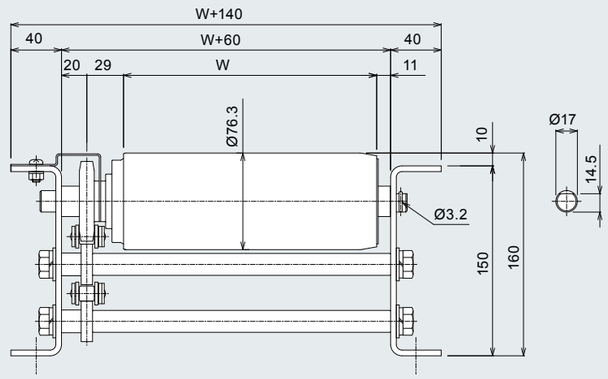

■ Specifications

(Unit: mm)

Model	KR-765013S	KR-766009S
Drive system	Chain drive (#50)	Chain drive (#60)
Roller dimensions (outer dia. × thickness × shaft dia.)	76.3 × 4.2 × 20 (no plating)	76.3 × 4.2 × 17 (no plating)
Roller width (W)	100 to 1,000 (increments of 100)	300 to 2,000 (increments of 100)
Roller pitch (P)	100 150 200	100 150 200 300
Frame dimensions	[150×40×4.5	[150×40×4.5
Sprocket (roller part)	#50×13TS	#60×9TS
Machine length (L)	max9,000	max12,000
Machine width	Roller width + 130	Roller width + 140
Machine height (H)	min500	min500
Transport capacity (kg/m)	max1,000	max700
Transport velocity V (m/min)	max20	max20
Motor output (kW)	0.2 0.4 0.75 1.5	0.2 0.4 0.75 1.5
Power	200 VAC (three phase)	200 VAC (three phase)

*The above specifications may change depending on the combination of the use conditions.
*Inverter control (slow start/slow down) is recommended for carrying heavy things. *Contact us for other available specifications besides the standard.

MAKITECH DRIVEN CONVEYOR

KR-605011SW

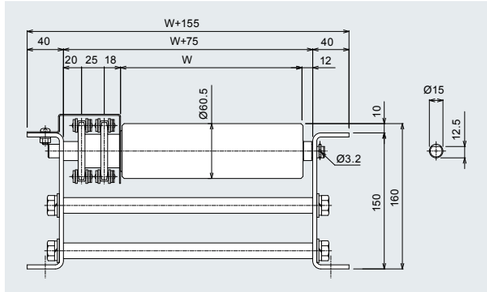

KR-765013SW

(Unit: mm)

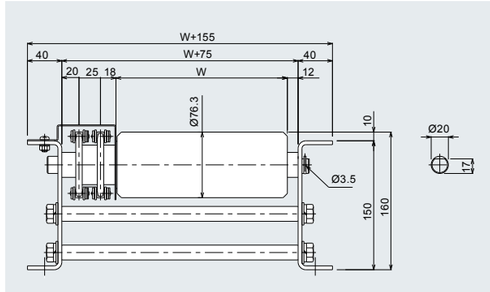

■ Guide list of combinations of machine length, speed, and output

(1,000kg/m)

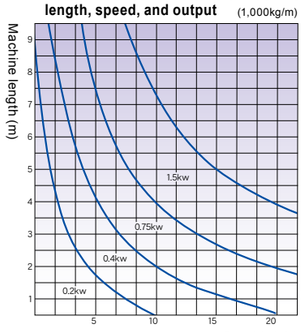

*The rolling friction coefficient of things carried on a conveyor is set to 0.05.

■ Guide list of combinations of machine length, speed, and output

(700 kg/m)

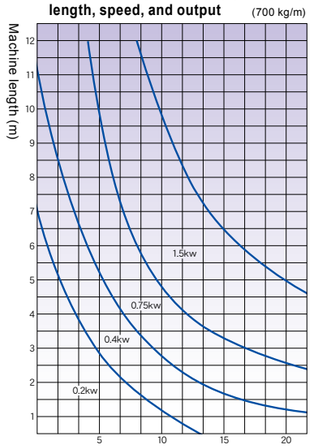

*The rolling friction coefficient of things carried on a conveyor is set to 0.05.

■ Guide list of combinations of machine length, speed, and output

(700 kg/m)

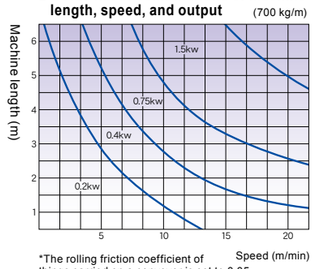

*The rolling friction coefficient of things carried on a conveyor is set to 0.05.

■ Guide list of combinations of machine length, speed, and output

(300 kg/m)

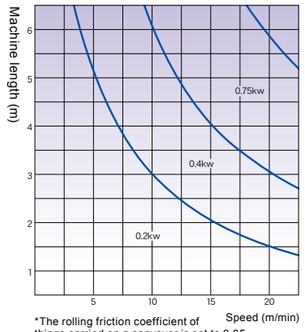

*The rolling friction coefficient of things carried on a conveyor is set to 0.05.

SW drive

■ Chain pitch and actual roller interval

(Unit: mm)

Nominal pitch	Actual pitch
P	#50 (chain used)
57	——
75	79.38
100	103.19
150	150.81
200	206.38
300	301.63

■ Specifications

(Unit: mm)

Model	KR-605011SW	KR-765013SW
Drive system	Chain drive (#50)	Chain drive (#50)
Roller dimensions (outer dia. × thickness × shaft dia.)	60.5 × 3.8 × 15 (no plating)	76.3 × 4.2 × 20 (no plating)
Roller width (W)	100 to 1,000 (increments of 50)	100 to 1,000 (increments of 100)
Roller pitch (P)	75 100 150	100 200
Frame dimensions	[150×40×4.5	[150×40×4.5
Sprocket (roller part)	#50×11TSW	#50×13TSW
Machine length (L)	max6,000	max6,000
Machine width	Roller width + 155	Roller width + 155
Machine height (H)	min500	min500
Transport capacity (kg/m)	max300	max700
Transport velocity V (m/min)	max20	max20
Motor output (kW)	0.2 0.4 0.75	0.2 0.4 0.75 1.5
Power	200 VAC (three phase)	200 VAC (three phase)

*The above specifications may change depending on the combination of the use conditions.
*Inverter control (slow start/slow down) is recommended for carrying heavy things. *Contact us for other available specifications besides the standard.

MAC-CS Chain driven accumulation roller conveyor

Steel | Chain transmission | Medium weight model | Standard series

The MAC accumulation roller conveyor always gives optimum driving force to carried items by adjusting the spring force. The MAC-CS model, which adjusts the driving force for every several rollers , and the MAC-CN model, which adjusts the driving force for each roller, can be selected depending on the applications and use conditions.

*MAC-CS574010S

MAC-CS

■ Guide list of combinations of machine length, speed, and output

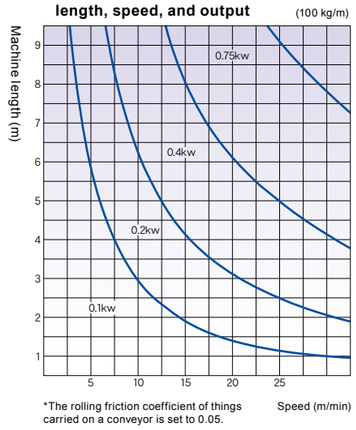

*The rolling friction coefficient of things carried on a conveyor is set to 0.05.

MAC-CS574010S

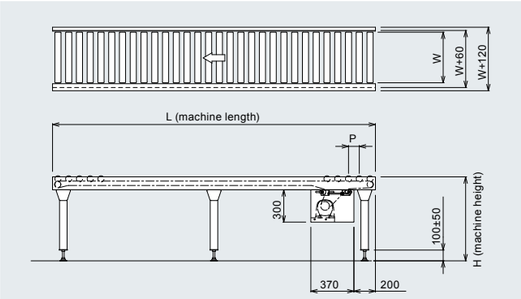

MAC-CS574010S

(Unit: mm)

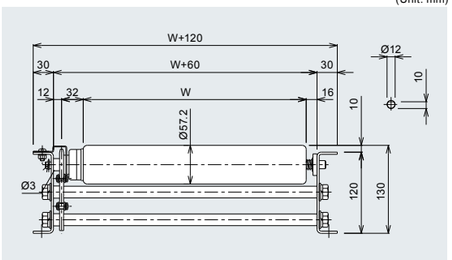

■ Specifications

(Unit: mm)

Model	MAC-CS384010S	MAC-CS574010S	MAC-CS604010S
Drive system	Chain drive (#40)	Chain drive (#40)	Chain drive (#40)
Roller dimensions(outer dia. × thickness × shaft dia.)	38.1 × 2.3 × 12 (with plating)	57.2 × 2.1 × 12 (with plating)	60.5 × 2.3 × 12 (with plating)
Roller width (W)	100 to 1,000 (increments of 50)	100 to 1,000 (increments of 50)	100 to 1,000 (increments of 50)
Roller pitch (P)	50 75 100	75 100 150	75 100 150
Frame dimensions	⌈120×30×3.2	⌈120×30×3.2	⌈120×30×3.2
Sprocket (roller part)	#40×10TS	#40×10TS	#40×10TS
Machine length (L)	max9,000	max9,000	max9,000
Machine width	Roller width + 120	Roller width + 120	Roller width + 120
Machine height (H)	min450	min450	min450
Transport capacity (kg/m)	max100	max100	max100
Transport velocity V (m/min)	max25	max25	max25
Motor output (kw)	0.2 0.4 0.75	0.2 0.4 0.75	0.2 0.4 0.75
Power	200 VAC (three phase)	200 VAC (three phase)	200 VAC (three phase)

*The above specifications may change depending on the combination of the use conditions.
*Contact us for other available specifications besides the standard.

MAKITECH DRIVEN CONVEYOR

MAC-G Chain driven accumulation roller conveyor

Steel | Chain transmission | Medium weight model | Standard series

Chain driven accumulation roller conveyor for middle weight things that uses #50 single chain.

(Unit: mm)

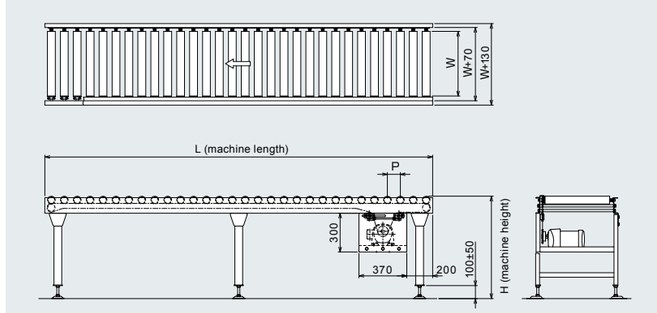

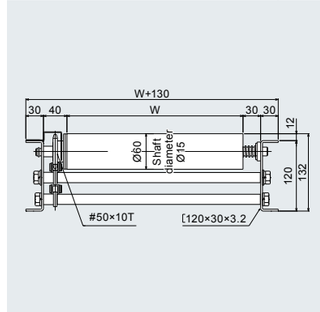

■ Specifications

(Unit: mm)

Model	MAC-G605010S
Drive system	Chain drive (#50)
Roller dimensions(outer dia. × thickness × shaft dia.)	60.5 × 2.3 × 15 (with plating)
Roller width (W)	100 to 1,000 (increments of 50)
Roller pitch (P)	75 100 150
Frame dimensions	⌈120×30×3.2
Sprocket (roller part)	#50×10TS
Machine length (L)	max8,000
Machine width	Roller width + 130
Machine height (H)	min450
Transport capacity (kg/m)	max300 (may change depending on the use conditions)
Transport velocity V (m/min)	max15
Motor output (kw)	0.2 0.4 0.75
Power	200 VAC (three phase)

*The above specifications may change depending on the combination of the use conditions.
*Contact us for other available specifications besides the standard.

■ Guide list of combinations of machine length, speed, and output

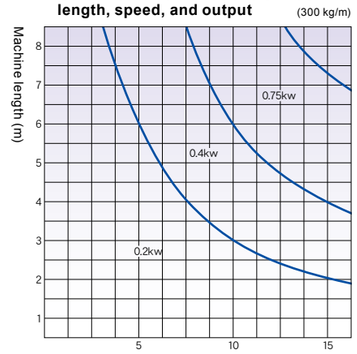

*The rolling friction coefficient of things carried on a conveyor is set to 0.05.

MAC-H Chain driven accumulation roller conveyor

Steel | Chain transmission | Heavy weight model | Standard series

Reliable MAC-H model for ultra-heavy loads that uses 150-frame and #60 single chain.
Accumulation conveyor for heavy loads with
maximum transport weight of 700 kg/m.

(Unit: mm)

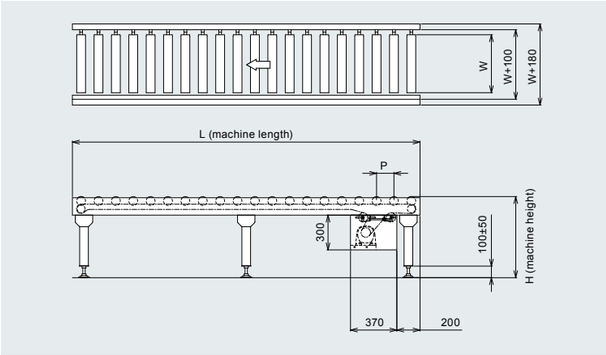

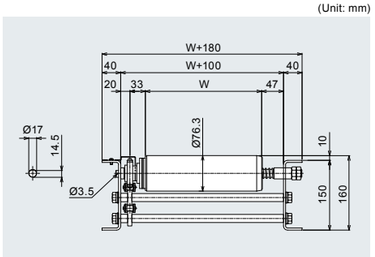

■ Guide list of combinations of machine length, speed, and output (700 kg/m)

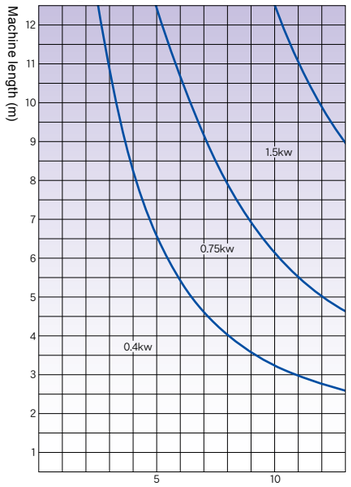

*The rolling friction coefficient of things carried on a conveyor is set to 0.05.

■ Specifications (Unit: mm)

Model	MAC-H766009S
Drive system	Chain drive (#60)
Roller dimensions (outer dia. × thickness × shaft dia.)	76.3 × 4.2 × 17 (no plating) (Φ20)
Roller width (W)	500 to 1,200 (increments of 50)
Roller pitch (P)	100 150
Frame dimensions	[150×40×4.5
Sprocket (roller part)	#60×9TS
Machine length (L)	max12,000
Machine width	Roller width + 200
Machine height (H)	min500
Transport capacity (kg/m)	max700 (may change depending on the use conditions)
Transport velocity V (m/min)	max10
Motor output (kw)	0.4 0.75 1.5
Power	200 VAC (three phase)

*The above specifications may change depending on the combination of the use conditions.
*Contact us for other available specifications besides the standard.
*A model with a shaft diameter of Φ 20 can also be made (for pallet conveyor etc.).

MMC-DR Driver roller M

Steel | Belt transmission | Medium weight model | 90-frame series | Simple accumulation

Performs quiet and smooth conveyance compared with the chain drive system even
in the case of high speed conveyance
by the drive shaft drive system.

*MMC-DR-57

(Unit: mm)

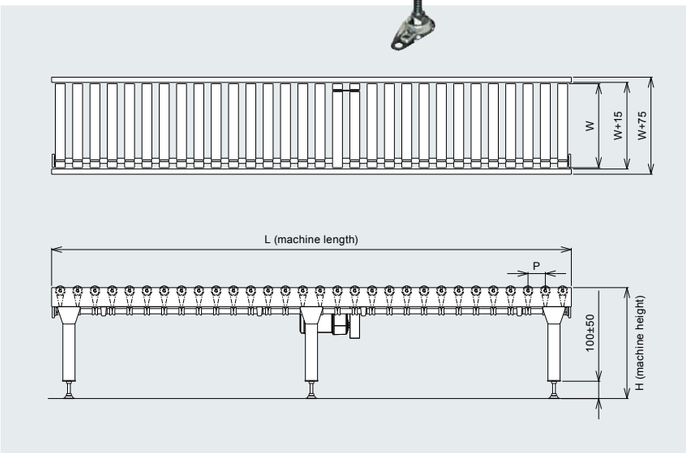

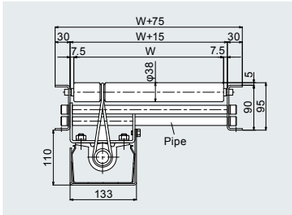

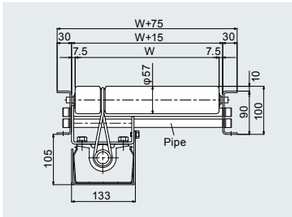

■ Specifications (Unit: mm)

Model	MMC-DR-38	MMC-DR-57
Drive system	Round belt drive	Round belt drive
Roller dimensions (outer dia. × thickness × shaft dia.)	38.1 × 1.2 × 12 (pipe axis)	57.2 × 1.4 × 12 (pipe axis)
Roller width (W)	400 to 1,000 (increments of 50)	400 to 1,000 (increments of 50)
Roller pitch (P)	50 75 100	75 100
Frame dimensions	[90×30×3.2	[90×30×3.2
Machine length (L)	1,000 (1,050) 2,000 (1,950) 3,000. Dimensions in the ( ) are for 75 pitches.	
Machine width	Roller width + 75	Roller width + 75
Machine height (H)	min300	min300
Transport capacity (kg/m)	max70	max70
Transport velocity V (50/60 Hz)	10/12 15/18 20/24 30/36m/min	
Motor output (kW)	0.2 0.4 0.75	0.2 0.4 0.75
Power	200 VAC (three phase)	200 VAC (three phase)

*Contact us for other available specifications besides the standard.

MMC-TC Driver roller M

Steel | Belt transmission | Medium weight model | 90-frame series | Simple accumulation

Performs quiet and smooth conveyance compared with the chain drive system even in the case of high speed conveyance by the drive shaft drive system.

*MMC-TC

(Unit: mm)

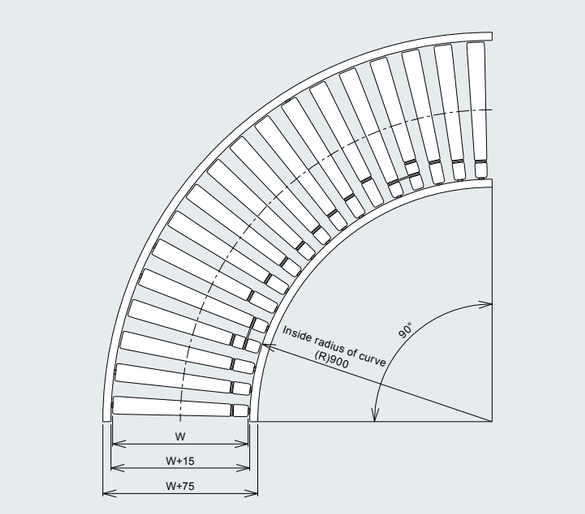

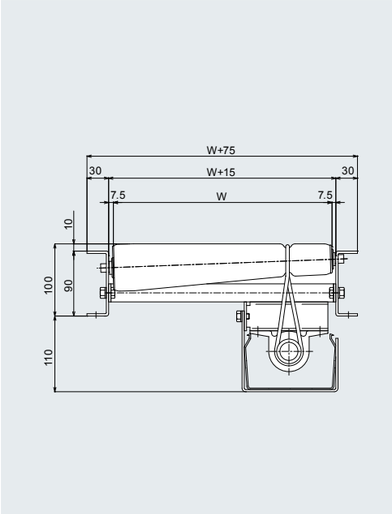

■ **Specifications** (Unit: mm)

Model	MMC-TC
Drive system	Round belt drive
Inside radius of curve (R)	900
Roller width (W)	400 to 700 (increments of 50)
Curve angle	90° 60° 45°
Machine height (H)	min300
Frame dimensions	[90×30×t 3.2
Roller dimensions	With tapered roller groove (pipe axis)

*Contact us for other available specifications besides the standard.

■ **Number of rollers**

Model	MMC-TC	
Angle \ Roller pitch	▲100P	▲75P
90°	18 pieces	22 pieces
60°	12 pieces	14 pieces
45°	9 pieces	11 pieces

▲ Nominal center pitch
(The roller center pitch of the curve changes by the size of the roller width.)

MJ Component system conveyor

Steel | Belt transmission | Medium weight model | Simple accumulation

MJB branching unit

(Unit: mm)

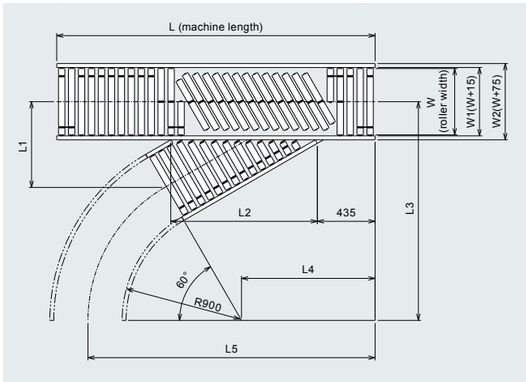

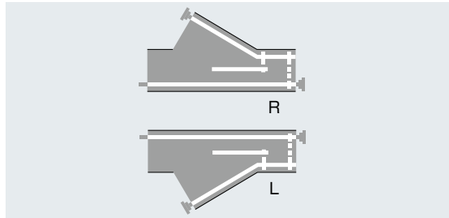

MJG merging unit

(Unit: mm)

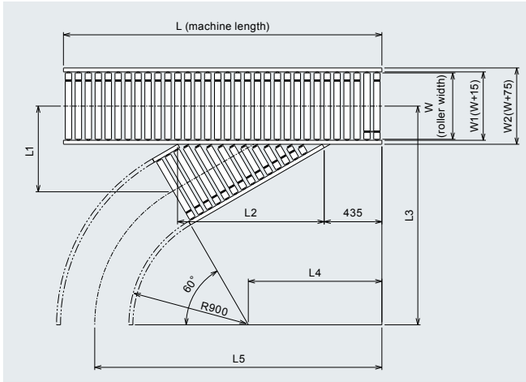

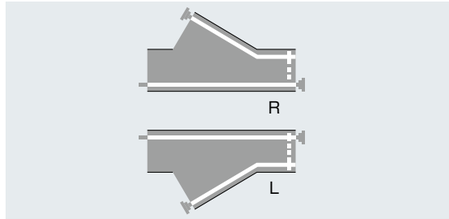

(Unit: mm)

W \ Item	L1	L2	L3	L4	L5
400	554	905	1,513	859	1,967
500	636	1,105	1,638	987	2,144
600	755	1,305	1,801	1,184	2,392
700	837	1,505	1,926	1,314	2,572

■ **Specifications** (Unit: mm)

Model	MJB	MJG
Drive system	Round belt drive	
Roller dimensions (outer dia. × thickness)	38.1×1.2 42×1.4 48×1.4 57×1.4	
Shaft diameter	12 (pipe axis)	
Roller width (W)	400 500 600 700	
Roller pitch (P)	75	
Frame dimensions	[120×30×t 2.3	
Machine length (L)	2,400	
Minimum machine height (H)	300	

FLY-E Flat belt driven roller conveyor

Steel | Belt transmission | Medium weight model

Low-noise conveyor that drives rollers by bringing the flat belt below the rollers in contact with the rollers.

Belt cover (optional)

(Unit: mm)

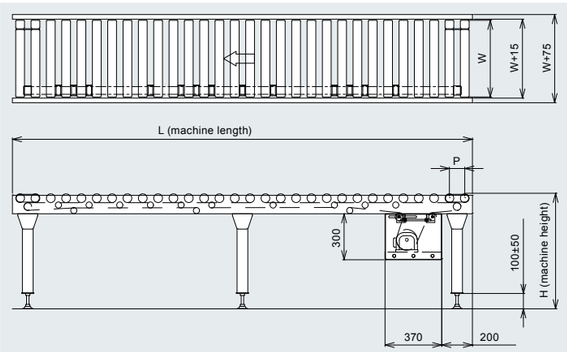

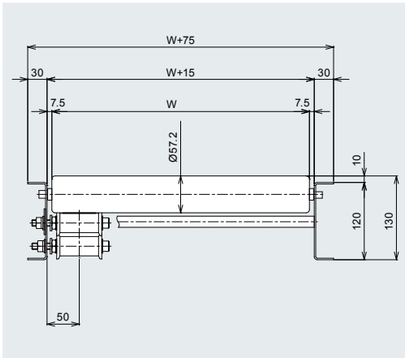

■ Specifications

(Unit: mm)

Model	FLY-E38	FLY-E57
Drive system	Flat belt drive (50) W	Flat belt drive (50) W
Roller dimensions (outer dia. × thickness × shaft dia.)	38.1×1.2×12 (pipe axis)	57.2×1.4×12 (pipe axis)
Roller width (W)	300 to 1,000 (increments of 50)	300 to 1,000 (increments of 50)
Roller pitch (P)	50 75 100	75 100
Frame dimensions	[120×30×2.3	[120×30×2.3
Machine length (L)	max12,000	max12,000
Machine width	Roller width + 75	Roller width + 75
Machine height (H)	min450	min450
Transport capacity (kg/m)	max70	max70
Transport velocity V (50/60 Hz)	10/12 15/18 20/24 30/36	10/12 15/18 20/24 30/36
Motor output (Kw)	0.1 0.2 0.4 0.75	0.1 0.2 0.4 0.75
Power	200 VAC (three phase)	200 VAC (three phase)

*Up to a model that operates at 120 m/min can be made. *The above specifications may change depending on the combination of the use conditions.
*Contact us for other available specifications besides the standard.

SST DC systematic roller conveyor (DC motor rollers)

Steel | Motor roller transmission | Medium weight model | [90-frame series

DC-57A

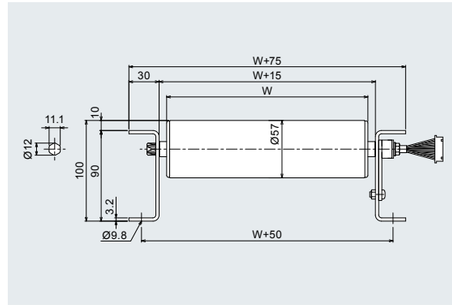

■ Specifications (when driver card EZQUBE Eco-mode is used)

(Unit: mm)

Model	DC-57A					
Drive system (interlock system)	Motor rollers (single acting)					
Auxiliary rollers (outer dia. × thickness × shaft dia.)	57×1.4×12 (with plating)					
Roller width (W)	300 to 1,000 (increments of 50)					
Roller pitch (P)	75 100 150					
Frame dimensions	[90×30×3.2					
Machine length (L)	1,000 (1,050) 1,500					
	2,000 (1,950) 3,000					
Machine width	Roller width + 75					
Transport velocity (V) m/min (circumferential velocity)	Model	Min.	Max.	Model	Min.	Max.
	Model 15	2.3	23.1	Model 20	3.1	31.6
	Model 25	3.8	38.5	Model 35	5.6	56.8
	Model 45	6.9	69.3	Model 60	9.4	94.7
	Model 75	11.5	115.6			
Power/output	24 VDC (DC) 40 W/piece					

*Machine length dimensions in the ( ) are for 75 pitches.
*Contact us for other available specifications besides the standard.
*Two or more motor rollers are always necessary for carried items.

DC-57B

*The belt cover is removed.

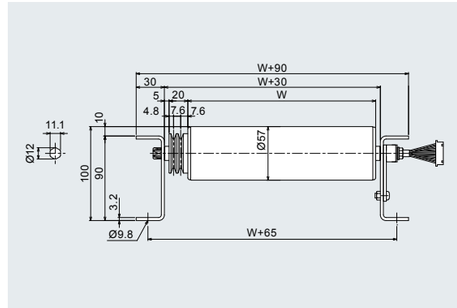

■ Specifications (when driver card EZQUBE Eco-mode is used)

(Unit: mm)

Model	DC-57B					
Drive system (interlock system)	Motor rollers (urethane V belt)					
Auxiliary rollers (outer dia. × thickness × shaft dia.)	57×1.4×12 (with plating)					
Roller width (W)	300 to 1,000 (increments of 50)					
Roller pitch (P)	75 100 150					
Frame dimensions	[90×30×3.2					
Machine length (L)	1,000 (1,050) 1,500					
	2,000 (1,950) 3,000					
Machine width	Roller width + 90					
Transport velocity (V) m/min (circumferential velocity)	Model	Min.	Max.	Model	Min.	Max.
	Model 15	2.3	23.1	Model 20	3.1	31.6
	Model 25	3.8	38.5	Model 35	5.6	56.8
	Model 45	6.9	69.3	Model 60	9.4	94.7
	Model 75	11.5	115.6			
Power/output	24 VDC (DC) 40 W/piece					

*Machine length dimensions in the ( ) are for 75 pitches.
*Contact us for other available specifications besides the standard.
*Contact us for other available roller diameters besides φ 57.

SST DC systematic roller conveyor (DC motor rollers)

Steel | Motor roller transmission | Medium weight model | [90-frame series

DC-38D

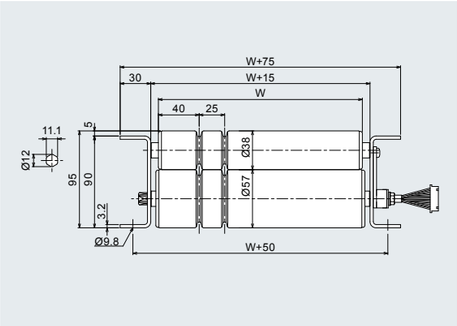

■ **Specifications** (when driver card EZQUBE Eco-mode is used) (Unit: mm)

Model	DC-38D					
Drive system (interlock system)	Motor rollers (urethane V belt)					
Auxiliary rollers (outer dia. × thickness × shaft dia.)	38.1×1.2×12 (with plating)					
Roller width (W)	300 to 800 (increments of 50)					
Roller pitch (P)	53 73.5 98.5					
Frame dimensions	[90×30×3.2					
Machine length (L)	1,000 (1,050) 1,500					
	2,000 (1,950) 3,000					
Machine width	Roller width + 75					
Transport velocity (V) m/min (circumferential velocity)	Model	Min.	Max.	Model	Min.	Max.
	Model 15	2.3	23.1	Model 20	3.1	31.6
	Model 25	3.8	38.5	Model 35	5.6	56.8
	Model 45	6.9	69.3	Model 60	9.4	94.7
	Model 75	11.5	115.6			
Power/output	24 VDC (DC) 40 W/piece					

*Machine length dimensions in the ( ) are for 75 pitches.
*Contact us for other available specifications besides the standard.

MAKITECH DRIVEN CONVEYOR

DC motor rollers with high input and output efficiency that gives about 300% torque compared with the AC motor of the same size and can change the speed in 32 stages at maximum by the internal volume setting inside the driver.

DC-57D

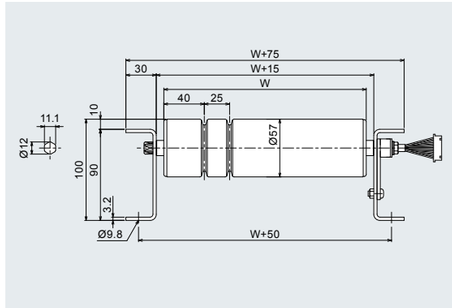

■ **Specifications** (when driver card EZQUBE Eco-mode is used) (Unit: mm)

Model	DC-57D					
Drive system (interlock system)	Motor rollers (urethane V belt)					
Auxiliary rollers (outer dia. × thickness × shaft dia.)	57×1.4×12 (with plating)					
Roller width (W)	300 to 1,000 (increments of 50)					
Roller pitch (P)	75 100 150					
Frame dimensions	[90×30×3.2					
Machine length (L)	1,000 (1,050) 1,500					
	2,000 (1,950) 3,000					
Machine width	Roller width + 75					
Transport velocity (V) m/min (circumferential velocity)	Model	Min.	Max.	Model	Min.	Max.
	Model 15	2.3	23.1	Model 20	3.1	31.6
	Model 25	3.8	38.5	Model 35	5.6	56.8
	Model 45	6.9	69.3	Model 60	9.4	94.7
	Model 75	11.5	115.6			
Power/output	24 VDC (DC) 40 W/piece					

*Machine length dimensions in the ( ) are for 75 pitches.
*Contact us for other available specifications besides the standard.

DC-57AQ

*The belt cover is removed.

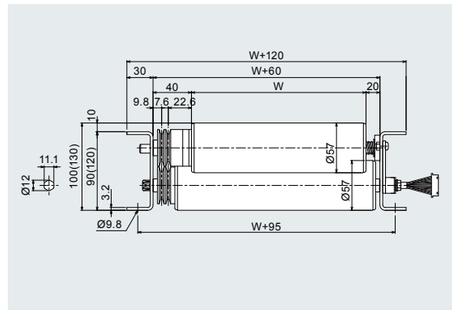

■ **Specifications** (when driver card EZQUBE Eco-mode is used) (Unit: mm)

Model	DC-57AQ					
Drive system (interlock system)	Motor rollers (urethane V belt)					
Auxiliary rollers (outer dia. × thickness × shaft dia.)	57×1.4×12 (with plating)					
Roller width (W)	300 to 1,000 (increments of 50)					
Roller pitch (P)	75 100 150					
Frame dimensions	[90×30×3.2 [120×30×3.2					
Machine length (L)	1,000 (1,050) 1,500					
	2,000 (1,950) 3,000					
Machine width	Roller width + 120					
Transport velocity (V) m/min (circumferential velocity)	Model	Min.	Max.	Model	Min.	Max.
	Model 15	2.3	23.1	Model 20	3.1	31.6
	Model 25	3.8	38.5	Model 35	5.6	56.8
	Model 45	6.9	69.3	Model 60	9.4	94.7
	Model 75	11.5	115.6			
Power/output	24 VDC (DC) 40 W/piece					

*Machine length dimensions in the ( ) are for 75 pitches.
*Contact us for other available specifications besides the standard.
*Contact us for other available roller diameters besides φ 57.

LBC Rubber belt conveyor

Steel | 90-frame | Head drive | Medium weight model | Macchikon

Belt conveyor optimum for carrying things with an unstable shape.
The belt conveyor utilizes a rubber belt with thickness and excellent elasticity.

LBC-1

(Unit: mm)

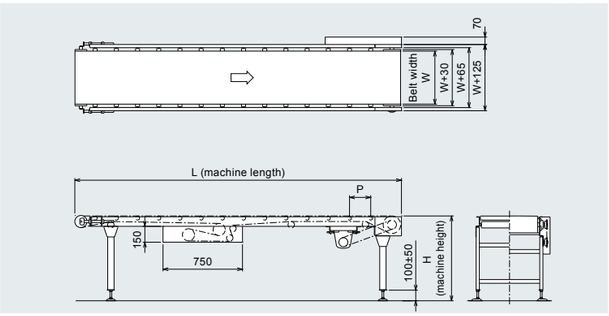

■ Guide list of combinations of machine length, speed, and output

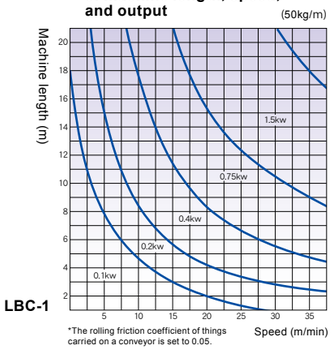

LBC-1

*The rolling friction coefficient of things carried on a conveyor is set to 0.05.

■ Specifications

(Unit: mm)

Model	LBC-1
Type	Horizontal type (all carrier type)
Belt	Black rubber belt × 2 P
Belt width (BW)	300 to 600 (increments of 100)
Frame dimensions	[90×30×3.2
Carrier rollers (outer dia. × thickness × shaft dia.)	38.1×1.2×12 [roller pitch 200 P]
Return rollers (outer dia. × thickness × shaft dia.)	60.5×2.3×15
Machine length (L)	1,200 to 20,000
Machine width	Belt width + 125
Machine height (H)	min500
Transport capacity (kg/m)	max50
Transport velocity (V) (m/min)	max36
Motor output (kW)	0.1 0.2 0.4 0.75 1.5
Power	200 VAC (three phase)

*When the machine length is 6,000 L or below, a take-up can be performed on the tail side too.
*When the machine length is 6,000 L or above, an intermediate take-up will be necessary. *Contact us for forward and reverse operations.

MBC Rubber belt conveyor

Steel | 120-frame | Head drive | Medium weight model | Emukon

Advanced medium weight model belt conveyor with excellent performance of the LBC such as its simple structure and unitized parts.

MBC-1

(Unit: mm)

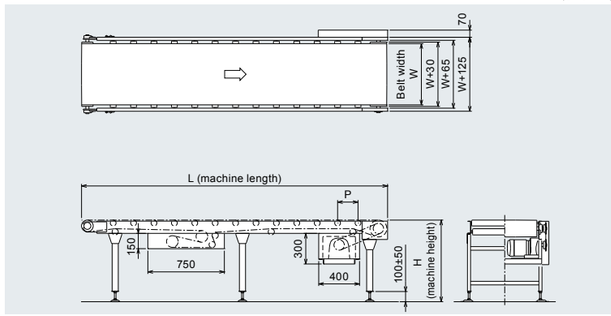

■ Guide list of combinations of machine length, speed, and output

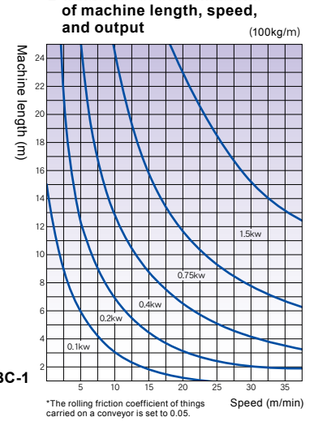

MBC-1

*The rolling friction coefficient of things carried on a conveyor is set to 0.05.

■ Specifications

(Unit: mm)

Model	MBC-1
Type	Horizontal type (all carrier type)
Belt	Black rubber belt × 2 P
Belt width (BW)	300 to 700
Frame dimensions	[120×30×3.2
Carrier rollers (outer dia. × thickness × shaft dia.)	57.2×2.1×12 [roller pitch 200 P]
Return rollers (outer dia. × thickness × shaft dia.)	60.5×2.3×15
Machine length (L)	1,200 to 25,000
Machine width	Belt width + 125
Machine height (H)	min500
Transport capacity (kg/m)	max100
Transport velocity (V) (m/min)	max36
Motor output (kW)	0.1 0.2 0.4 0.75 1.5
Power	200 VAC (three phase)

*When the machine length is 6,000 L or below, a take-up can be performed on the tail side too.
*When the machine length is 6,000 L or above, an intermediate take-up will be necessary. *Contact us for forward and reverse operations.

WBC Rubber belt conveyor

Steel | 250-frame | Head drive | Medium and heavy weight model | Dabukon

In addition to a belt width of 700, 800 to 1400 variations are now available.
It is suitable for carrying things and pallets with an unstable shape.

(Unit: mm)

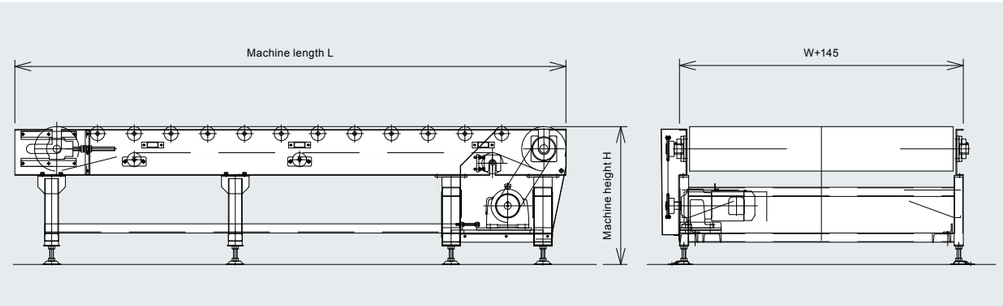

■ Specifications

(Unit: mm)

Model	WBC-1
Type	Horizontal type (all carrier type)
Belt	Black rubber belt × 3 P
Belt width (BW)	800 to 1400
Frame dimensions	[250×40×4.5 t
Carrier rollers	Ø76.2×4.2t×20d (roller pitch 200 P)
Return rollers	Ø76.3×4.2t×20d
Machine length (L)	max10000
Machine width	Belt width + 145
Machine height (H)	min 650
Transport capacity (Kg/m)	max 250
Transport velocity (V) (m/min)	max 20
Motor output (Kw)	0.75 1.5 2.2
Power	200 VAC (three phase)

*The above specifications may change depending on the combination of the use conditions. *Contact us for other widths besides the above.

SCC-40A Basic chain conveyor

Iron frame | Iron rails | Medium weight model

Chain conveyor that continuously runs
and has the simplest structure.
High maintainability and durability
because of its iron chain rail structure.

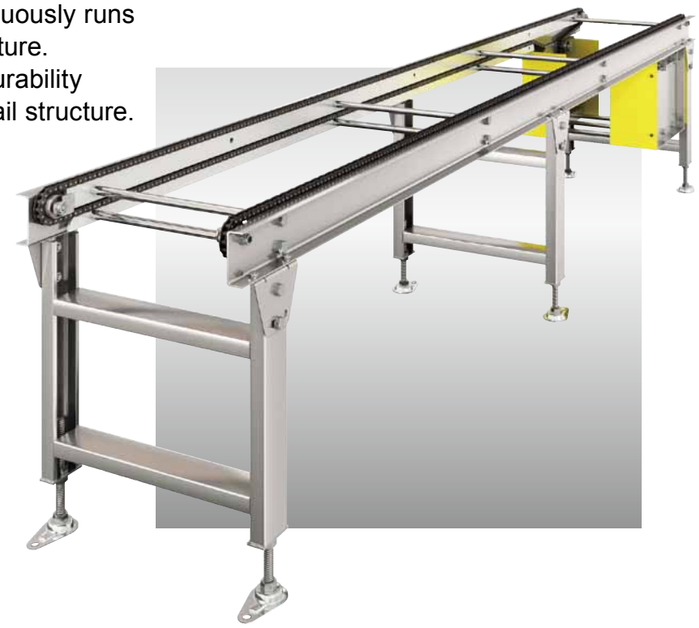

(Unit: mm)

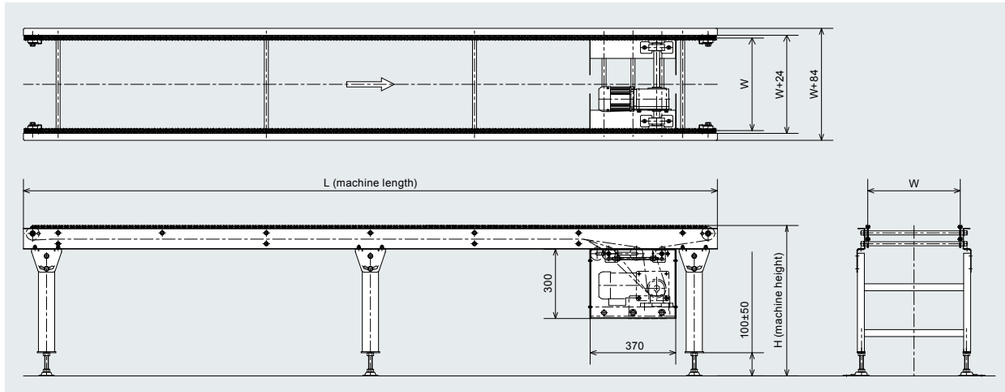

■ Specifications

(Unit: mm)

Model	SCC-40A
Chain used	#40 oval steel chain
Chain width (W)	300 to 800
Frame	[90×30×2.3
Machine length (L)	max10,000
Machine width	Center-to-center width of chain + 84
Machine height (H)	min450
Transport capacity (kg/m)	max80
Transport velocity (V) (m/min)	max20
Motor output (kW)	0.1 0.2 0.4 0.75
Power	200 VAC (three phase)

*The above specifications may change depending on the combination of the use conditions.
The transport capacity also depends on the number of pipe supports and the fixed pitch of
the chain rail. It is recommended to determine the details upon consultation.

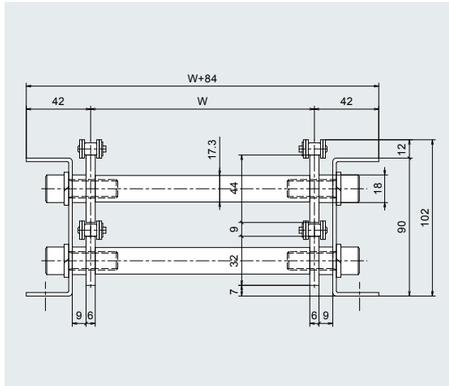

SCC-40B Simple chain conveyor

Iron frame | Iron rails | Medium weight model

Performs high rigidity as a chain conveyor and has excellent durability because the iron chain rails are replaceable.

(Unit: mm)

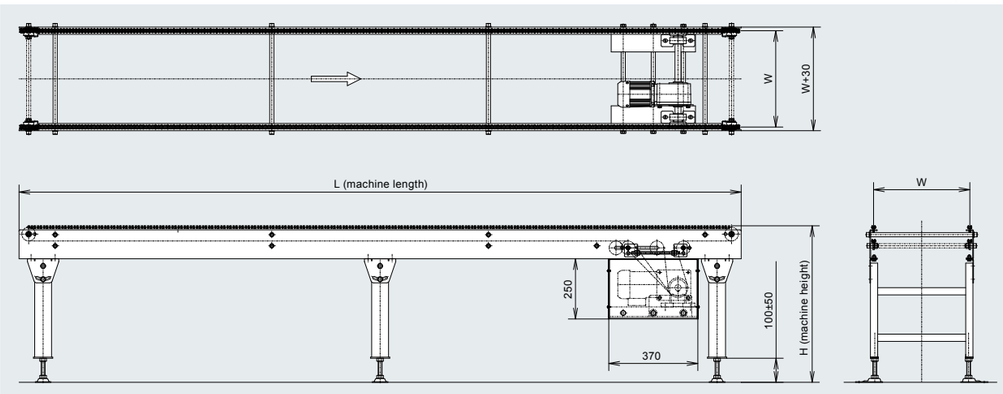

■ Specifications

(Unit: mm)

Model	SCC-40B
Chain used	#40 oval steel chain
Chain width (W)	300 to 1,000
Frame	[90×30×3.2
Machine length (L)	max10,000
Machine width	Center-to-center width of chain + 30
Machine height (H)	min450
Transport capacity (kg/m)	max100
Transport velocity (V) (m/min)	max20
Motor output (kW)	0.1 0.2 0.4 0.75
Power	200 VAC (three phase)

*The above specifications may change depending on the combination of the use conditions.

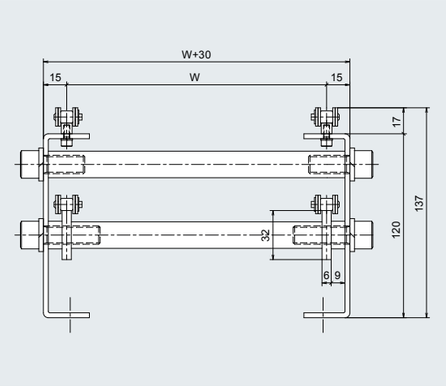

Guide

GK-1 (Pipe)

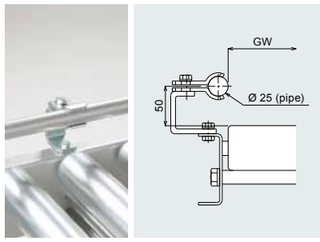

GK-2 (Pipe/adjustable height and width)

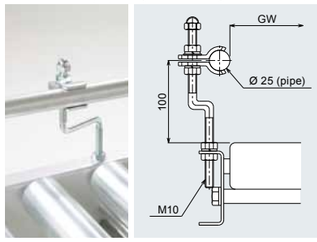

GK-3 (Round resin/adjustable width) (Unit: mm)

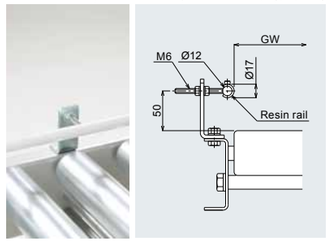

GK-4 (Round resin/adjustable width)

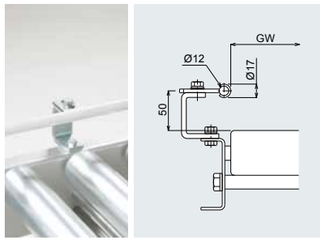

GK-5 (Flat resin/adjustable width)

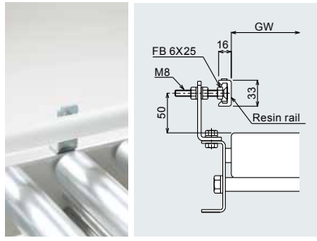

GK-6 (Flat resin/adjustable width)

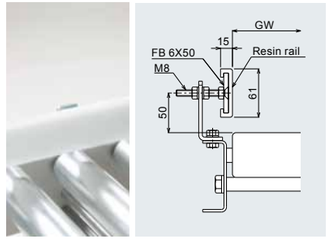

GK-7 (Flat resin/adjustable width)

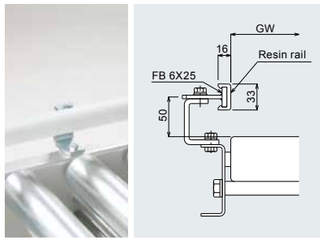

GK-8 (Flat resin/adjustable width)

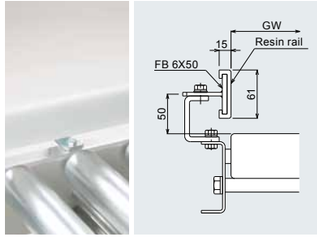

GK-9 (Flat resin)

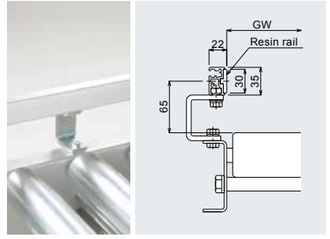

JLK

Steel

(Unit: mm)

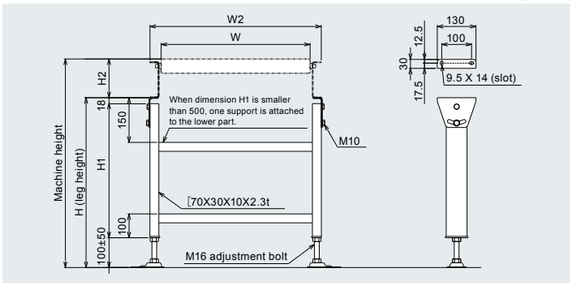

2FB

Steel

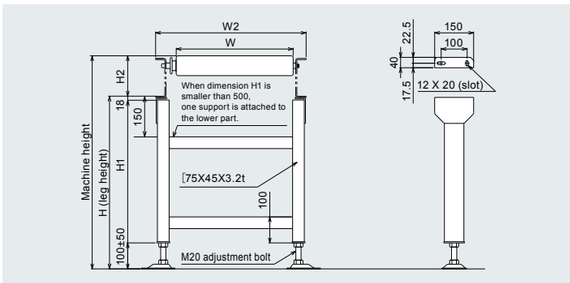

Rollers for special driven conveyors

We will make rollers for special driven conveyors that meet your needs.

Drive roller with one-way clutch

Roller with outer diameter sprocket

Pillow receiving type roller

Drive roller with head bearing

Drive roller with sprocket

KR-192510S

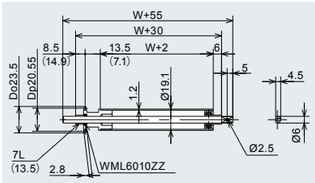

KR-283511S

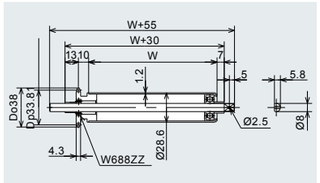

KR-574010S

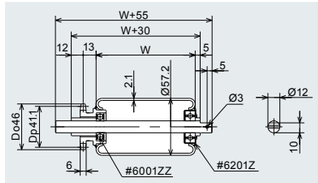

(Unit: mm)

KR-574010SW

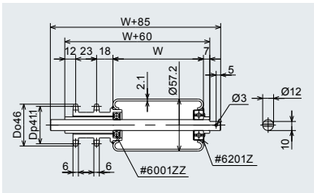

■ **High revolution/low noise (grease type standard bearing is adopted)**

Name symbol	Roller outer dia. (Ø) × thickness (t) Bearing	Shaft outer dia. (Ø) Processing	Sprocket belt	Roller width W	Note
KR-192510S	19.1 × 1.2 (with plating) WML6010zz/ machined bearing	6 cold finished round bar Semicircle	#25 10T Single A/B	100 to 500 Standard dimension or increments of 50	There are two types of sprocket positions because of the W chain.
KR-283511S	28.6 × 1.2 (with plating) W688zz/ machined bearing	8 cold finished round bar Semicircle	#35 11T Single	100 to 500 Standard dimension or increments of 50	
KR-384010S	38.1 × 2.3 (with plating) #6201Z with boss	12 cold finished round bar Semicircle	#40 10T Single	100 to 1,000 Standard dimension or increments of 50	Types with a resin boss and without a resin boss can also be made.
KR-384010SW	38.1 × 2.3 (with plating) #6201Z with boss	12 cold finished round bar Semicircle	#40 10T Double	100 to 1,000 Standard dimension or increments of 50	Types with a resin boss and without a resin boss can also be made.
KR-574010S	57.2 × 2.1 (with plating) #6201Z with boss	12 cold finished round bar Semicircle	#40 10T Single	100 to 1,000 Standard dimension or increments of 50	Types with a resin boss and without a resin boss can also be made.
KR-574010SW	57.2 × 2.1 (with plating) #6201Z with boss	12 cold finished round bar Semicircle	#40 10T Double	100 to 1,000 Standard dimension or increments of 50	Types with a resin boss and without a resin boss can also be made.

*Other sizes besides the above can also be made as sub standard. Please contact us.

Auto tensioner

OT

Standard sensor

Type A

Type B

Drive part window

JKW

Reinforcement pipe

JHP

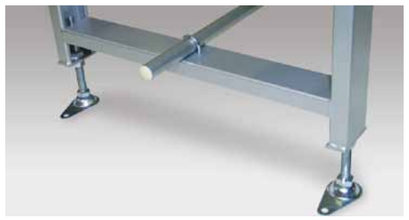

Electrical duct (resin)

JUD

(Unit: mm)

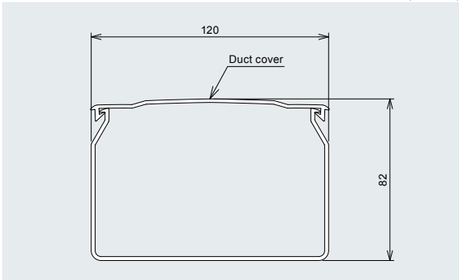

ALUMI FRAME CONVEYOR

CONTENTS

Barikon series

	●Accumulation chain conveyor	Medium weight model BCK	P033
		Medium weight model BCB	P034
	●Chain conveyor	Medium weight model BAC	P035
		Heavy weight model FDC	P036
		Heavy weight model BDC	P037
	●Top chain conveyor	Medium weight model BCT	P038
	●Guide/legs	GB-1／GB-3 GB-4／GB-5 JLK／2FB／ALK	P039

BCK Accumulation chain conveyor

Aluminum frame | Medium weight model | Barikon series

The BCK model with resin rollers on a chain conveyor that runs continuously is a free flow conveyor that allows conveyance and temporary stop freely.

*BCK-0
*Aluminum standard legs are also available.

BCK-0

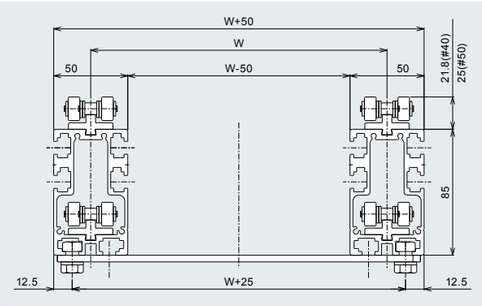

BCK-60

(Unit: mm)

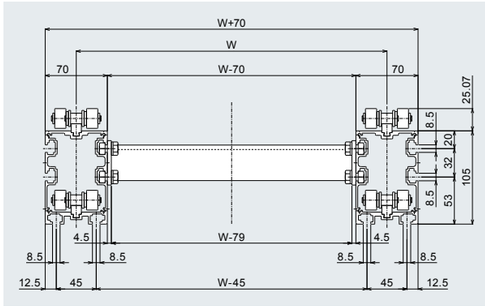

■ **Specifications**

(Unit: mm)

Model	BCK-0	BCK-60
Chain used	#40, #50 zigzag type with resin rollers	#60 zigzag type with resin rollers
Chain width (W)	min200	min500
Frame	Aluminum extrusion molding	Aluminum extrusion molding
Machine length (L)	max10,000	max10,000
Machine width	Chain width + 50	Chain width + 70
Machine height (H)	min450	min500
Transport capacity (kg/m)	#40:max40 #50:max50	max500
Transport velocity (V) (m/min)	max20	max10
Motor output (kW)	0.1 0.2 0.4 0.75	0.4 0.75 1.5
Power	200 VAC (three phase)	200 VAC (three phase)

*The above specifications may change depending on the combination of the use conditions. *Chain with plating and stainless chain can also be made.
*Contact us for other available specifications besides the standard.

BCB Double-speed chain conveyor

Aluminum frame | Medium weight model | Barikon series

The chain speed becomes low during double-speed conveyance.
Therefore, accumulation at low noise is possible.

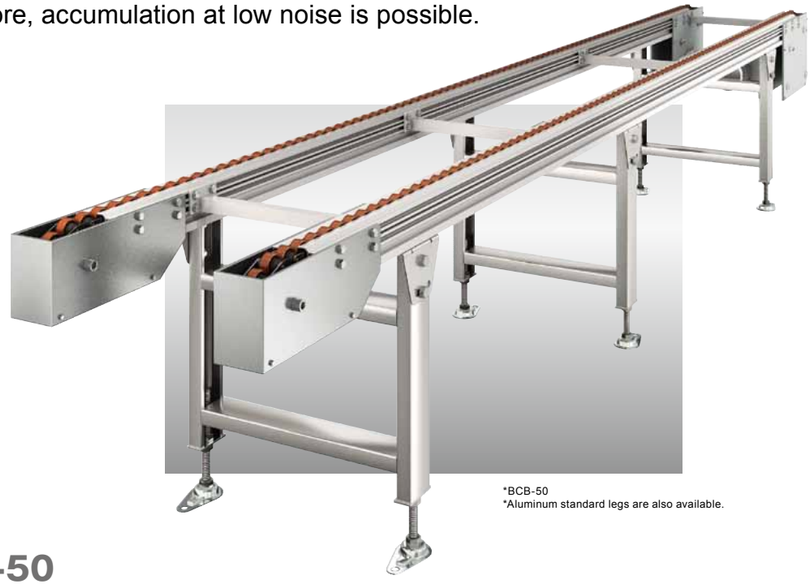

*BCB-50
*Aluminum standard legs are also available.

BCB-50

(Unit: mm)

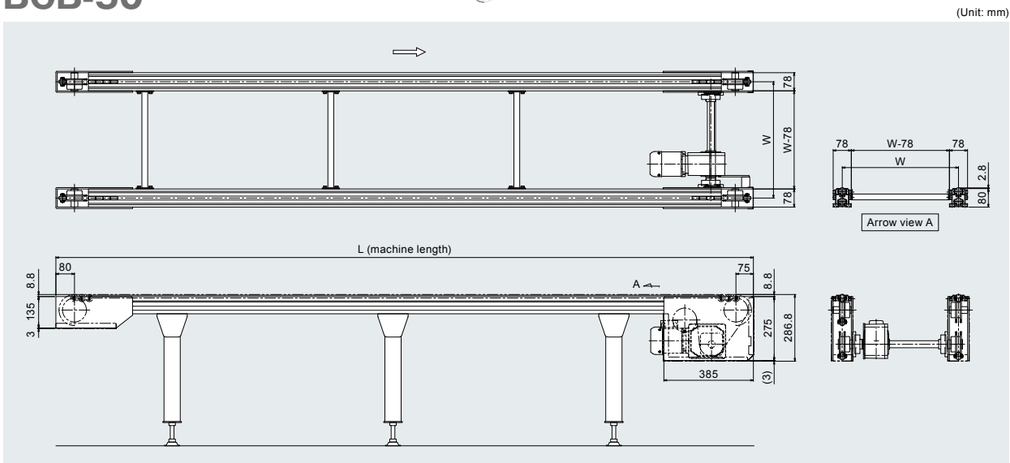

■ Specifications

(Unit: mm)

Model	BCB-40	BCB-50	BCB-60
Chain used	RF2040VRP-A	RF2050VRP-A	RF2060VRP-A
Chain width (W)	min300	min350	min400
Frame	Aluminum extrusion molding	Aluminum extrusion molding	Aluminum extrusion molding
Machine length (L)	max10,000	max10,000	max10,000
Machine width	Chain width + 63	Chain width + 78	Chain width + 95
Machine height (H)	min500	min500	min500
Transport capacity (kg/m)	max40	max60	max80
Transport velocity (V) (m/min)	max30	max30	max30
Motor output (kW)	0.2 0.4 0.75	0.2 0.4 0.75	0.2 0.4 0.75
Power	200 VAC (three phase)	200 VAC (three phase)	200 VAC (three phase)

*The above specifications may change depending on the combination of the use conditions.
*Contact us for other available specifications besides the standard.

BAC Chain conveyor

Aluminum frame | Medium weight model | Barikon series

The BAC model is a conveyor with a simple structure that carries things by the chain of two rows that continuously runs.

*BAC-0
*Aluminum standard legs are also available.

■ Guide list of combinations of machine length, speed, and output (40kg/m)

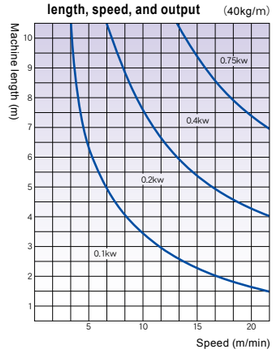

■ Guide list of combinations of machine length, speed, and output (50kg/m)

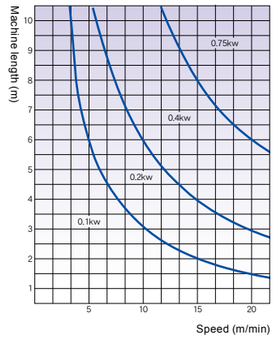

BAC-0

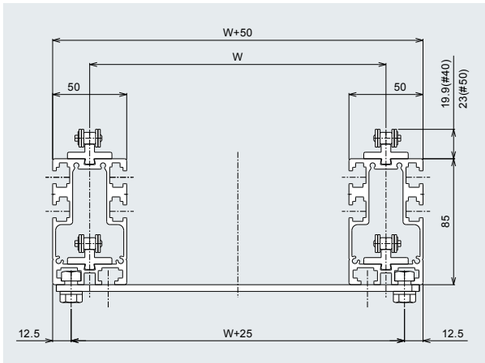

BAC-60

(Unit: mm)

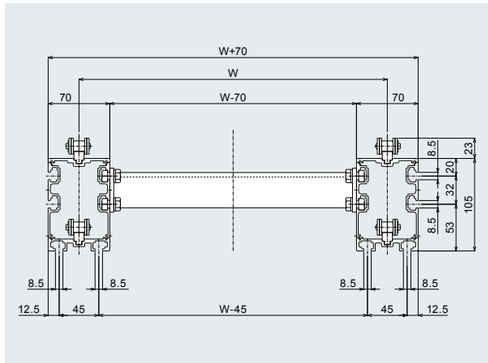

■ Specifications

(Unit: mm)

Model	BAC-0	BAC-60
Chain used	#40, #50 oval steel chain	#60 oval steel chain
Chain width (W)	min200	min500
Frame	Aluminum extrusion molding	Aluminum extrusion molding
Machine length (L)	max10,000	max10,000
Machine width	Chain width + 50	Chain width + 70
Machine height (H)	min450	min500
Transport capacity (kg/m)	#40:max40 #50:max50	max500
Transport velocity (V) (m/min)	max20	max10
Motor output (kW)	0.1 0.2 0.4 0.75	0.4 0.75 1.5
Power	200 VAC (three phase)	200 VAC (three phase)

*The above specifications may change depending on the combination of the use conditions. *Chain with plating can also be made. *Contact us for other available specifications besides the standard.

FDC Chain conveyor

Aluminum frame | Heavy weight model | Barikon series

FDC-1

(Unit: mm)

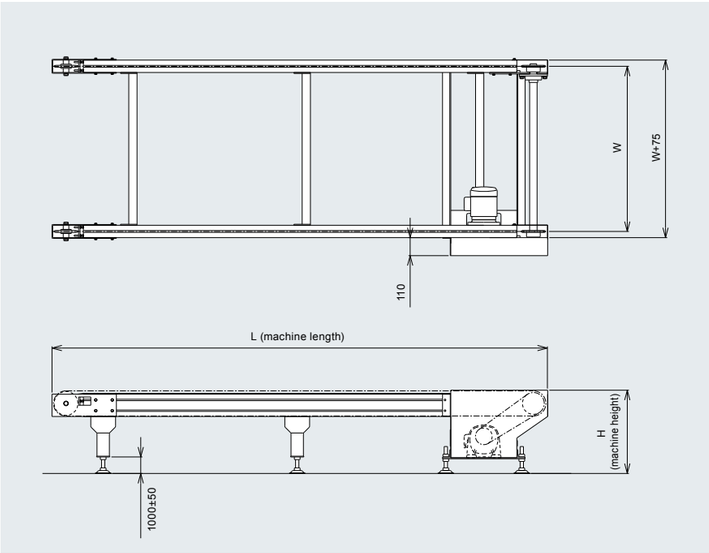

■ Guide list of combinations of machine length, speed, and output (500kg/m)

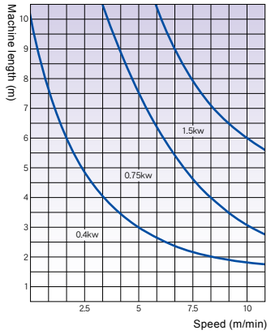

■ Guide list of combinations of machine length, speed, and output (700kg/m)

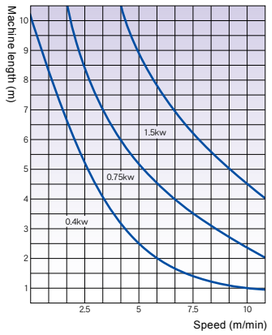

FDC-1

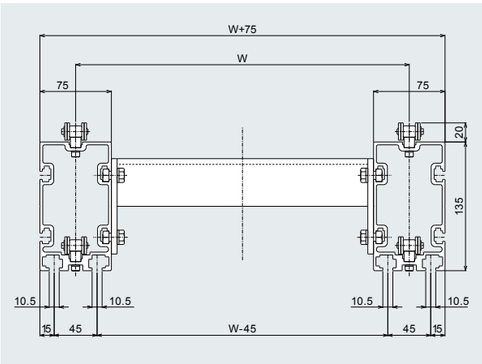

FDC-2

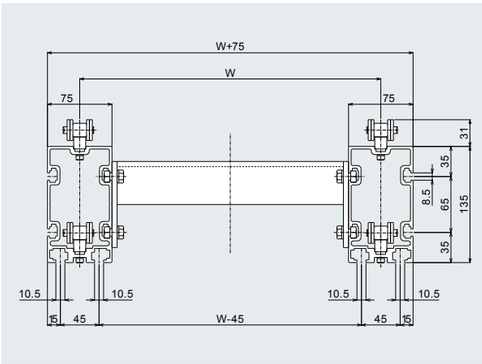

■ Specifications

(Unit: mm)

Model	FDC-1	FDC-2
Chain used	#60 oval steel chain	#80 oval steel chain
Chain width (W)	min500	min500
Frame	Aluminum extrusion molding	Aluminum extrusion molding
Machine length (L)	max10,000	max10,000
Machine width	Chain width + 75	Chain width + 75
Machine height (H)	min500	min500
Transport capacity (kg/m)	max500	max700
Transport velocity (V) (m/min)	max10	max7
Motor output (kW)	0.4 0.75 1.5	0.4 0.75 1.5
Power	200 VAC (three phase)	200 VAC (three phase)

*The above specifications may change depending on the combination of the use conditions. *Contact us for other available specifications besides the standard.

MAKITECH DRIVEN CONVEYOR

BDC Chain conveyor

Aluminum frame | Heavy weight model | Barikon series

The simple and sturdy chain conveyor BDC model for heavy loads is a conveyor developed for carrying pallets. In addition to production fields, it can be used for various purposes such as the stockyard storage and retrieval system, distribution, and carrier line.

■ Guide list of combinations of machine length, speed, and output (700 kg/m)

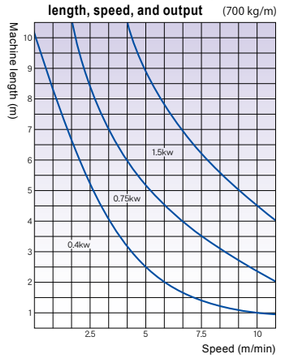

■ Guide list of combinations of machine length, speed, and output (2,000 kg/m)

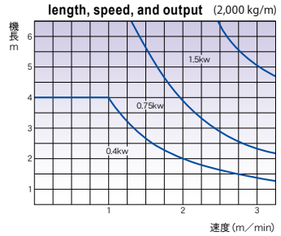

BDC-2

(Unit: mm)

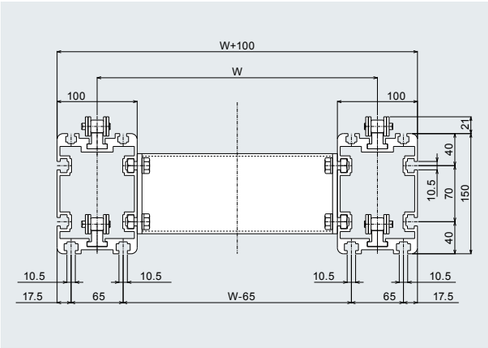

BDC-1AT

(Unit: mm)

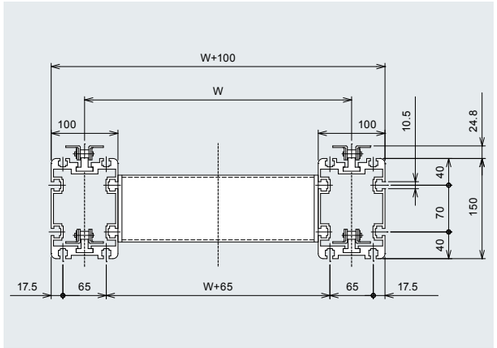

■ Specifications

(Unit: mm)

Model	BDC-1	BDC-2
Chain used	#60 steel chain	#80 steel chain
Chain width (W)	700 to 1,000	700 to 1,000
Frame	Aluminum extrusion molding	Aluminum extrusion molding
Machine length (L)	1,200 to 10,000	3,000 to 6,000
Machine width	Chain width + 100	Chain width + 100
Machine height (H)	min500	min500
Transport capacity (kg/m)	max700	max2,000
Transport velocity (V) (m/min)	max10	max3
Motor output (kW)	0.4 0.75 1.5	0.4 0.75 1.5
Power	200 VAC (three phase)	200 VAC (three phase)

*The above specifications may change depending on the combination of the use conditions. *Contact us for other available specifications besides the standard.

BCT Top chain conveyor

Aluminum frame | Medium weight model | Barikon series

The BCT model is a top chain conveyor having a stainless plate on the upper surface of the chain and a larger width for the items to be carried.
The BCT-0 model, which is driven directly, is now available.

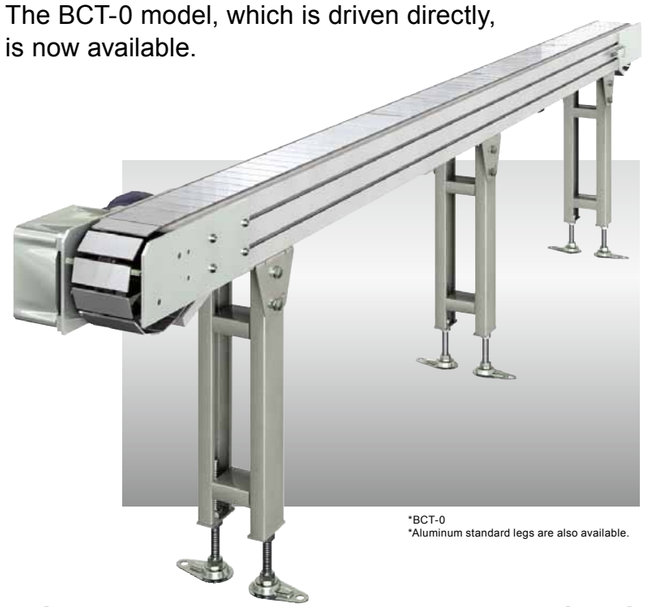

*BCT-0
*Aluminum standard legs are also available.

■ Guide list of combinations of machine length, speed, and output (40 kg/m)

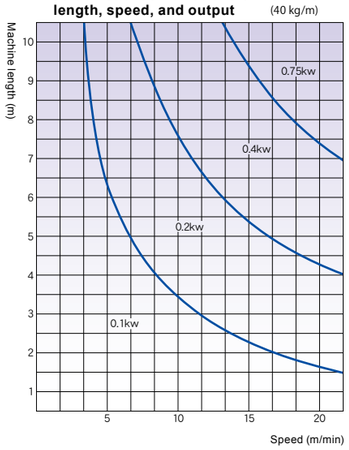

BCT

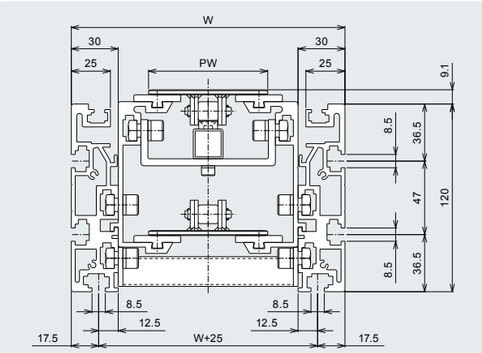

BCT-0

(Unit: mm)

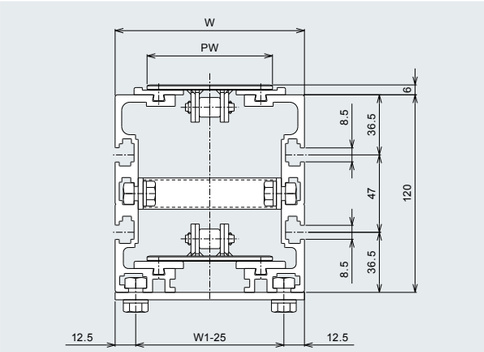

■ Specifications (Unit: mm)

Model	BCT	BCT-0
Chain used	Top chain #60 (plate: stainless)	
Plate width (W)	Commercial size between 76.2 to 190.5 can be made.	
Frame	Aluminum extrusion molding	Aluminum extrusion molding
Machine length (L)	max10,000	max10,000
Machine width	See the table on the right.	See the table on the right.
Machine height (H)	min500	min400
Transport capacity (kg/m)	max30	max30
Transport velocity (V) (m/min)	max20	max20
Motor output (kW)	0.1 0.2 0.4 0.75	0.1 0.2 0.4 0.75
Power	200 VAC (three phase)	200 VAC (three phase)

■ Plate width and machine width (Unit: mm)

Plate width (PW)	BCT machine width (W)	BCT-0 machine width (W)
76.2	175	115
82.6	180	120
95.0	185	135
101.6	190	140
110.0	200	150
114.3	205	155
127.0	215	165
152.4	240	190
190.5	280	230

*The above specifications may change depending on the combination of the use conditions. *Contact us for other available specifications besides the standard.

Guide

GB-1 (Pipe/adjustable height and width)

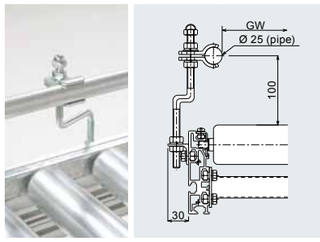

GB-3 (Flat resin/adjustable width)

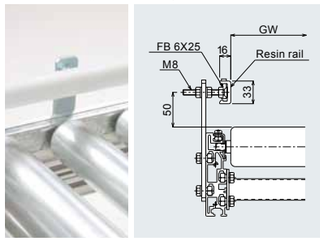

GB-4 (Flat resin/adjustable width) (Unit: mm)

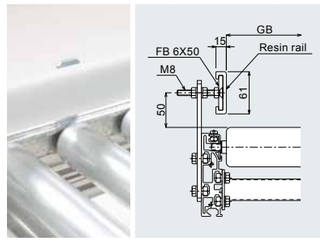

GB-5 (Flat resin/fixed type)

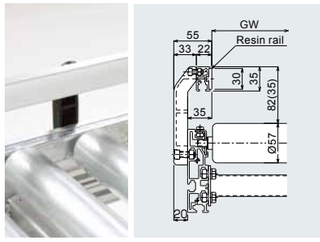

(Unit: mm)

JLK

Steel

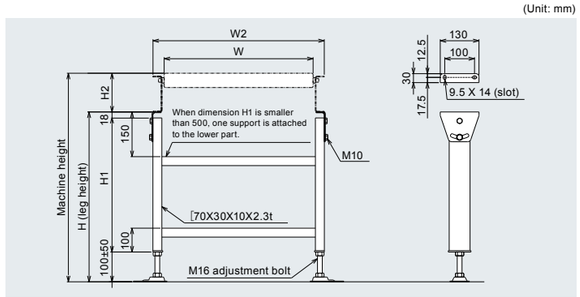

2FB

Steel

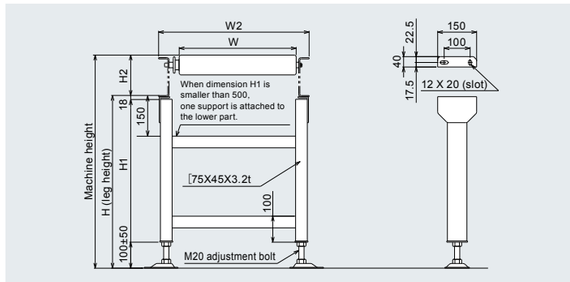

ALK

Aluminum

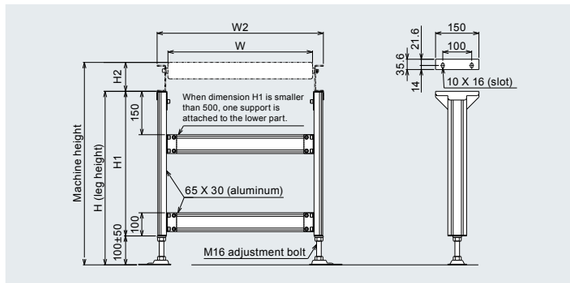

BELGOTCH

CONTENTS

Belgotch

•Short width model	Type34-N1	P041
•Standard model •Meander-less model •High speed model •Tilted model •Troughed belt model •Roller edge meander-less model •Knife edge model •Joint model •Joint meander-less model	Type34-S1 Type34-G1 Type34-H1 Type34-T1 Type34-V1 Type34-RG1 Type34-K1 Type34-J1 Type34-JG1	P042～050
•Standard model •Meander-less model •Belt cleat model •Troughed belt model •Roller edge meander-less model •Knife edge model	Type34-S2 Type34-G2 Type34-D2 Type34-V2 Type34-RG2 Type34-K2	P051～056
•Standard model •Meander-less model •Standard model •Strong type model	Type60-S1 Type60-G1 Type60-SZ1P Type60-GZ1P	P057～059
•Standard model •Meander-less model	Type60-S2 Type60-G2	P060～061
•Standard model •Meander-less model •Standard model	Type90-S1 Type90-G1 Type90-S2	P062～064
•Slope belt cleat model •Steep slope belt cleat model	Type60-ZD2 Type120-ZD2S	P065～066
•Belt •Legs •Guide •Optional parts		P067～079

TYPE 34-N1 Short width model

34-frame

Aluminum frame | Center drive | Light weight model

■A timing belt is used for the drive part as standard.

*The legs are available as option. See the option page (the standard color is silver).

Standard belt (enlarged view)

The speed change model equipped with a brushless DC motor and a control unit as standard.

The maximum rotation speed of 4,000 r/min and a velocity ratio of 1:37.5 (80 to 3,000 r/min) can be set.
The motor speed is displayed on the monitor.

SELECT How to select a model

Type34	NS1	50	2,000	T1	A25
Number/ frame thickness (mm)	N:short width/ model name Standard/ center drive Meander-less/ center drive S:Standard model G:Meander-less model	Belt width (mm)	Machine length (mm)	Constant speed/T Speed change/B Number/ speed symbol	A (100 VAC, single phase) B (200 VAC, single phase) C (200 VAC, three phase) Number/motor output (25 W/40 W/60 W)

SIZE Standard specifications

(Unit: mm)

Belt width (nominal)	50					75				
Machine width	90 (frame part)					115 (frame part)				
Machine length	500	1,000	1,500	2,000	2,500	3,000	3,500	4,000	5,000	6,000

Machine height	150	Power	100 VAC (single phase) 200 VAC (single phase) 200 VAC (three phase)
Belt speed	Constant speed Speed change	Belt (standard)	Polyurethane belt (Green color, compliant with food standards, antistatic treatment done)
Transport capacity	See the transport capacity graph.	Option	Legs, guide, etc.
Rated output	Constant speed 25 W, 40 W Speed change 60 W		

●The actual belt width becomes narrower than the above nominal belt width by 5 mm, and by 10 mm when the machine length of 4 m is exceeded.

DRAWING

(Unit: mm)

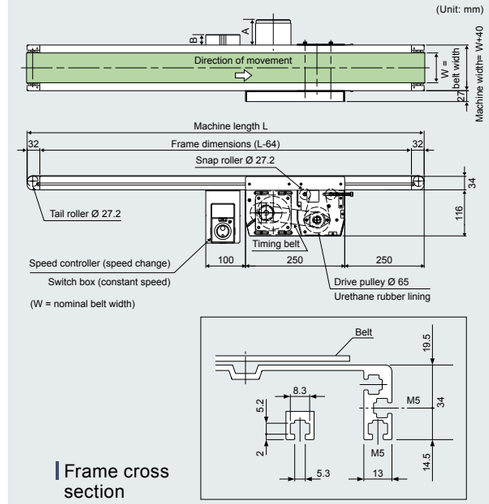

Frame cross section

DATA

Transport capacity graph (constant speed)

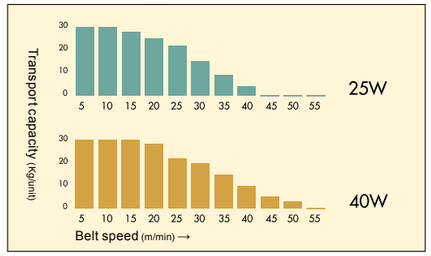

■ The graph shows the capacity when the loads are dispersed horizontally. Carry items at the setting of 40% or below.
■ The transport capacity fluctuates depending on various factors.

Belt speed table

Reduction ratio	Speed symbol	Constant speed (m/min) 50/60(Hz)	Reduction ratio	Speed symbol	Speed change (m/min) 50・60(Hz)
1/180	T1	1.6/1.9	1/200	B1	0.1～2.9
1/150	T2	1.9/2.3			
1/120	T3	2.4/2.9			
1/100	T4	2.9/3.5	1/100	B2	0.16～5.8
1/90	T5	3.2/3.9			
1/75	T6	3.9/4.6			
1/60	T7	4.8/5.8			
1/50	T8	5.8/7.0	1/50	B3	0.3～11.6
1/36	T9	8.1/9.7			
1/30	T10	9.7/11.6			
1/25	T11	11.6/14.0	1/30	B4	0.5～19.3
1/18	T12	16.2/19.4			
1/15	T13	19.4/23.3	1/20	B5	0.8～29.1
1/12.5	T14	23.3/27.9			
1/9	T15	32.3/38.8	1/15	B6	1.0～38.7

■ The constant belt speed is calculated by the motor speed of 1,500/1,800 rpm (50/60 Hz), drive pulley diameter of Ø 65, and drive efficiency of 95%.
■ The belt speed of speed change is calculated by the motor speed of 80 rpm to 3,000 rpm (50・60 Hz), drive pulley diameter of Ø 65, and drive efficiency of 95%.
■ The speed change type is recommended when the speed needs to be selected accurately.
■ The pulley and the motor work together by the timing belt system.

Standard setting motor output table (mm)

Machine length \ Belt width	50	75
500～3,000	Constant speed 25 W, speed change 60 W	
3,001～6,000	Constant speed 40 W, speed change 60 W	

Switch box projection dimension (mm)

Nominal belt width	50	75
Projection dimension	68	43

*Common to constant speed and speed change

Motor projection dimension

●Constant speed (mm)

Motor output \ Belt width	50	75
25W	46.5(36)	21.5(11)
40W	84(66)	59(41)

*( ) For a gear head with reduction ratio of 1/9 to 1/18

●Speed change (mm)

Motor output \ Belt width	50	75
60W	14(9) ((19))	—

*( ) For a reduction ratio of 1/15 or 1/20
*(( )) For a reduction ratio of 1/200

TYPE 34-S1 Standard model

34-frame

Aluminum frame | **Center drive** | **Light weight model**

A timing belt is used for the drive part as standard for the first time in this class. The general-purpose model of the Belgotch series having excellent quietness and durability.

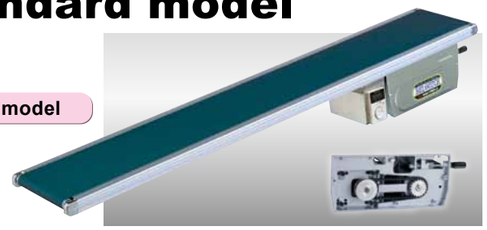

*The legs are available as option. See the option page (the standard color is silver).

*The chain system is adopted depending on the machine length and the belt width.

Standard belt (enlarged view)

The speed change model equipped with a brushless DC motor and a control unit as standard.

The maximum rotation speed of 4,000 r/min and a velocity ratio of 1:37.5 (80 to 3,000 r/min) can be set.
The motor speed is displayed on the monitor.

SELECT How to select a model

Type34	S1	300	2,000	B1	A60
Number/ frame thickness (mm)	S: Standard/ model name 1: Center drive	Belt width (mm)	Machine length (mm)	Constant speed/T Speed change/B Number/ speed symbol	A (100 VAC, single phase) B (200 VAC, single phase) C (200 VAC, three phase) Number/motor output (25 W/40 W/60 W/ 90 W/120 W)

SIZE Standard specifications

(Unit: mm)

Belt width (nominal)	50	75	100	150	200	250	300	350	400	500	600
Machine width	90	115	140	190	240	290	340	390	440	540	640
Machine length	500	1,000	1,500	2,000	2,500	3,000	3,500	4,000	5,000	6,000	7,000	8,000

Machine height | 169
Belt speed | Constant speed / Speed change
Transport capacity | See the transport capacity graph.
Rated output | Constant speed 25 W, 40 W, 60 W / Speed change 60 W, 120 W
Power | 100 VAC (single phase) / 200 VAC (single phase) / 200 VAC (three phase)
Belt (standard) | Polyurethane belt (Green color, compliant with food standards, antistatic treatment done)
Option | Legs, guide, etc.

- The actual belt width becomes narrower than the above nominal belt width by 5 mm, and by 10 mm when the machine length of 4 m is exceeded and in the case of models with a belt width of 500 and 600.
- When the machine length is 6 m or above, an intermediate take-up unit comes with the conveyor.

DATA

Transport capacity graph (constant speed)

machine length 3,000, belt width 300

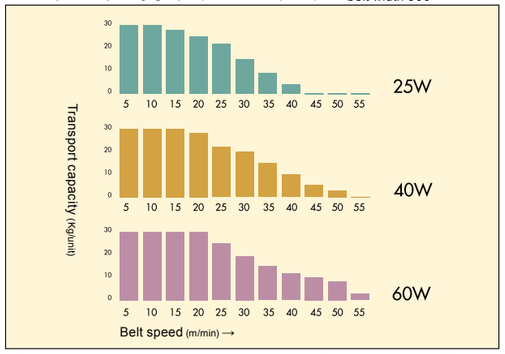

- The graph shows the capacity when the loads are dispersed horizontally. Carry items at the setting of 40% or below.
- The transport capacity fluctuates depending on various factors.

Belt speed table

Reduction ratio	Speed symbol	Constant speed (m/min) 50/60(Hz)	Reduction ratio	Speed symbol	Speed change (m/min) 50・60(Hz)
1/180	T1	1.9/2.3	1/200	B1	0.1～3.4
1/150	T2	2.3/2.7			
1/120	T3	2.8/3.4	1/100	B2	0.2～6.8
1/100	T4	3.4/4.1			
1/90	T5	3.8/4.5			
1/75	T6	4.6/5.5			
1/60	T7	5.7/6.8	1/50	B3	0.4～13.6
1/50	T8	6.8/8.2			
1/36	T9	9.5/11.4			
1/30	T10	11.4/13.7	1/30	B4	0.6～22.7
1/25	T11	13.7/16.4			
1/18	T12	19.0/22.8			
1/15	T13	22.8/27.3	1/20	B5	1.0～34.1
1/12.5	T14	27.3/32.8			
1/9	T15	37.9/45.5	1/15	B6	1.2～45.5

- The constant belt speed is calculated by the motor speed of 1,500/1,800 rpm (50/60 Hz), drive pulley diameter of Ø 76.3, and drive efficiency of 95%.
- The belt speed of speed change is calculated by the motor speed of 80 rpm to 3,000 rpm (50・60 Hz), drive pulley diameter of Ø 76.3, and drive efficiency of 95%.
- The speed change type is recommended when the speed needs to be selected accurately.
- Speed change 120 W and speed symbols B1 to B4 are chain drive [ ]. Others are timing belt drive.

Standard setting motor output table (mm)

Machine length \ Belt width	50~200	250~400	500~600
500~3,000	Constant speed 25 W, speed change 60 W		
3,001~4,000	Constant speed 40 W, speed change 60 W		
4,001~6,000			
6,001~8,000	Constant speed 60 W, speed change 120 W		

*50 W up to a machine length of 2,500 L *75 W up to a machine length of 6,000 L

Switch box projection dimension (mm)

Nominal belt width	50	75	100
Projection dimension	68	43	18

*Common to constant speed and speed change

DRAWING

(Unit: mm)

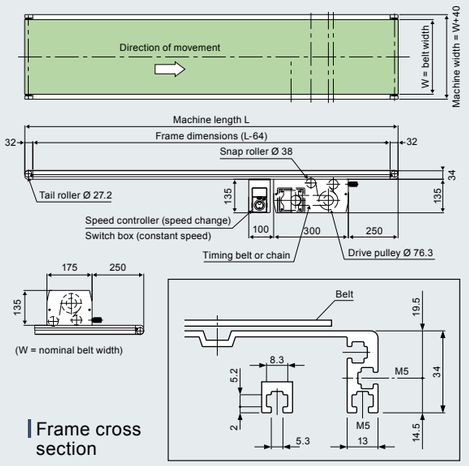

Frame cross section

Motor projection dimension

●Constant speed (mm)

Motor output \ Belt width	50	75	100	150
25W	72(61)	47(36)	22(11)	—
40W	109(91)	84(66)	59(41)	9
60W	—	—	85	35
90W	—	—	100	50

*( ) For a reduction ratio of 1/9 to 1/18

●Speed change (mm)

Motor output \ Belt width	50	75	100	150
60W	42(37)((47))	17(12)((22))	—	—
120W	—	—	14(2)((20))	—

*( ) For a reduction ratio of 1/15 or 1/20
*(( )) For a reduction ratio of 1/200

TYPE 34-G1 Meander-less model

34-frame

Aluminum frame | **Center drive** | **Light weight model**

Stable conveyance with less deviation is realized by adopting a meander-less belt. It is suitable for places that are difficult to perform maintenance inspection such as when the conveyor is set to other machines. It also supports severe use conditions such as forward reverse operations and can be used for various purposes.

*The legs are available as option. See the option page (the standard color is silver).

*The chain system is adopted depending on the machine length and the belt width.

Standard belt (enlarged view)

The speed change model equipped with a brushless DC motor and a control unit as standard.

The maximum rotation speed of 4,000 r/min and a velocity ratio of 1:37.5 (80 to 3,000 r/min) can be set.
The motor speed is displayed on the monitor.

SELECT How to select a model

Type34	G1	200	1,500	B3	B60
Number/ frame thickness (mm)	G: Meander-less/ model name 1: Center drive	Belt width (mm)	Machine length (mm)	Constant speed/T Speed change/B Number/ speed symbol	A (100 VAC, single phase) B (200 VAC, single phase) C (200 VAC, three phase) Number/motor output (40 W/60 W/120 W)

SIZE Standard specifications

(Unit: mm)

Belt width (nominal)	50	75	100	150	200	250	300	350	400	500	600
Machine width	90	115	140	190	240	290	340	390	440	540	640
Machine length	500	1,000	1,500	2,000	2,500	3,000	3,500	4,000	5,000	6,000

Machine height | 169
Belt speed | Constant speed / Speed change
Transport capacity | See the transport capacity graph.
Rated output | Constant speed 40 W, 60 W / Speed change 60 W, 120 W
Power | 100 VAC (single phase) / 200 VAC (single phase) / 200 VAC (three phase)
Belt (standard) | Polyurethane belt (Green color, compliant with food standards, antistatic treatment done)
Option | Legs, guide, etc.

- The actual belt width becomes narrower than the above nominal belt width by 5 mm, and by 10 mm when the machine length of 4 m is exceeded and in the case of models with a belt width of 500 and 600.

DRAWING

(Unit: mm)

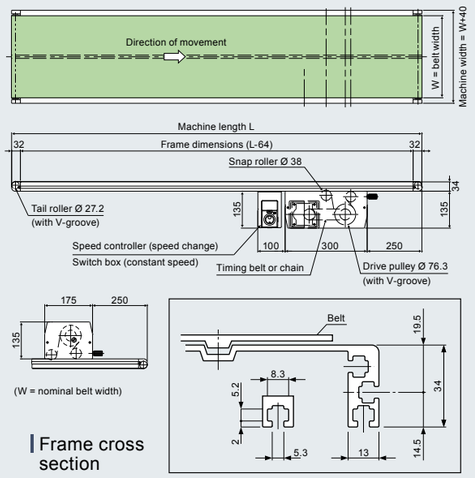

Frame cross section

DATA

Transport capacity graph (constant speed)

machine length 3,000, belt width 300

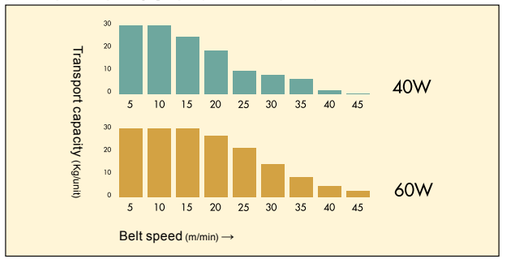

- The graph shows the capacity when the loads are dispersed horizontally. Carry items at the setting of 40% or below.
- The transport capacity fluctuates depending on various factors.

Belt speed table

Reduction ratio	Speed symbol	Constant speed (m/min) 50/60(Hz)	Reduction ratio	Speed symbol	Speed change (m/min) 50・60(Hz)
1/180	T1	1.9/2.3	1/200	B1	0.1～3.4
1/150	T2	2.3/2.7			
1/120	T3	2.8/3.4	1/100	B2	0.2～6.8
1/100	T4	3.4/4.1			
1/90	T5	3.8/4.5			
1/75	T6	4.6/5.5			
1/60	T7	5.7/6.8	1/50	B3	0.4～13.6
1/50	T8	6.8/8.2			
1/36	T9	9.5/11.4			
1/30	T10	11.4/13.7	1/30	B4	0.6～22.7
1/25	T11	13.7/16.4			
1/18	T12	19.0/22.8			
1/15	T13	22.8/27.3	1/20	B5	1.0～34.1
1/12.5	T14	27.3/32.8			
1/9	T15	37.9/45.5	1/15	B6	1.2～45.5

- The constant belt speed is calculated by the motor speed of 1,500/1,800 rpm (50/60 Hz), drive pulley diameter of Ø 76.3, and drive efficiency of 95%.
- The belt speed of speed change is calculated by the motor speed of 80 rpm to 3,000 rpm (50・60 Hz), drive pulley diameter of Ø 76.3, and drive efficiency of 95%.
- The speed change type is recommended when the speed needs to be selected accurately.
- Speed change 120 W and speed symbols B1 to B4 are chain drive [ ]. Others are timing belt drive.

Standard setting motor output table (mm)

Machine length \ Belt width	50~250	300~400	500~600
500~3,000	Constant speed 40 W, Speed change 60 W		
3,001~6,000		Constant speed 60 W Speed change 120 W	

*50 W up to a machine length of 1,500 L *75 W up to a machine length of 4,000 L

Switch box projection dimension (mm)

Nominal belt width	50	75	100
Projection dimension	68	43	18

*Common to constant speed and speed change

Motor projection dimension

●Constant speed (mm)

Motor output \ Belt width	50	75	100	150
25W	72(61)	47(36)	22(11)	—
40W	109(91)	84(66)	59(41)	9
60W	—	—	85	35
90W	—	—	100	50

*( ) For a reduction ratio of 1/9 to 1/18

●Speed change (mm)

Motor output \ Belt width	50	75	100	150
60W	42(37)((47))	17(12)((22))	—	—
120W	—	—	14(2)((20))	—

*( ) For a reduction ratio of 1/15 or 1/20
*(( )) For a reduction ratio of 1/200

TYPE 34-H1 High speed model

34-frame

Aluminum frame | **Center drive** | **Light weight model**

The high grade model that meets the needs of factories with advanced labor saving and faster speed.Its compact design with frame thickness of 34 mm does not require a large place for installation.
The drive part that moves fast has low-noise and high-durability specifications, and carries things efficiently without impairing the work environment.

*The chain system is adopted depending on the machine length and the belt width.

*The legs are available as option. See the option page (the standard color is silver).
*It is recommended to attach auxiliary legs because the conveyor may overturn depending on the place where it is installed.

Standard belt (enlarged view)

The speed change model equipped with a brushless DC motor and a control unit as standard.

The maximum rotation speed of 4,000 r/min and a velocity ratio of 1:37.5 (80 to 3,000 r/min) can be set.
The motor speed is displayed on the monitor.

SELECT How to select a model

Type34	H1	400	3,000	T16	A90
Number/ frame thickness (mm)	H: High speed/ model name 1: Center drive	Belt width (mm)	Machine length (mm)	Constant speed/T Speed change/B Number/ speed symbol	A (100 VAC, single phase) B (200 VAC, single phase) C (200 VAC, three phase) Number/motor output (60 W/90 W/120 W)

SIZE Standard specifications

(Unit: mm)

Belt width (nominal)	100	150	200	250	300	350	400	500
Machine width	140	190	240	290	340	390	440	540
Machine length	1,000	1,500	2,000	2,500	3,000			

Machine height	169	Power	100 VAC (single phase) 200 VAC (single phase) 200 VAC (three phase)
Belt speed	Constant speed Speed change	Belt (standard)	Polyurethane belt (Green color, compliant with food standards, antistatic treatment done)
Transport capacity	See the transport capacity graph.	Option	Legs, guide, etc.
Rated output	Constant speed 60 W, 90 W Speed change 120 W		

●The actual belt width becomes narrower than the above nominal belt width by 10 mm.

DRAWING

(Unit: mm)

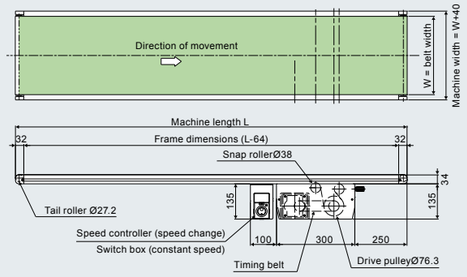

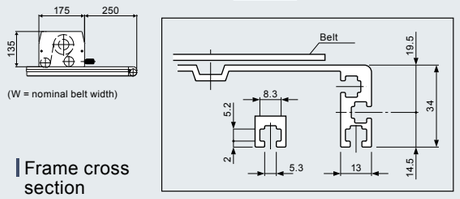

Frame cross section

DATA

Transport capacity graph (constant speed)

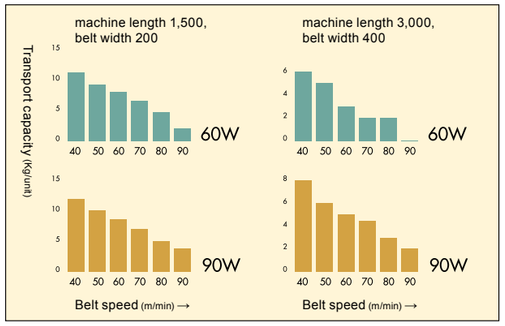

■ The graph shows the capacity when the loads are dispersed horizontally. Carry items at the setting of 40% or below.
■ The transport capacity fluctuates depending on various factors.

Belt speed table

Reduction ratio	Speed symbol	Constant speed (m/min) 50/60(Hz)	Reduction ratio	Speed symbol	Speed change (m/min) 50・60(Hz)
1/7.5	T16	45.5/54.6	1/10	B7	1.8～68.2
1/6	T17	56.9/68.3			
1/5	T18	68.3/82	1/5	B8	3.7～136.5
1/3.6	T19	94.8/113.8			

The constant belt speed is calculated by the motor speed of 1,500/1,800 rpm (50/60 Hz), drive pulley diameter of Ø 76.3, and drive efficiency of 95%.
■ The belt speed of speed change is calculated by the motor speed of 80 rpm to 3,000 rpm (50・60 Hz), drive pulley diameter of Ø 76.3, and drive efficiency of 95%.
■ The speed change type is recommended when the speed needs to be selected accurately.
■ The pulley and the motor work together by the timing belt system.

Switch box projection dimension (mm)

Nominal belt width	100
Projection dimension	18

*Common to constant speed and speed change

Standard setting motor output table (mm)

Machine length \ Belt width	100~250	300~400	500
1,000~1,500	Constant speed 60 W Speed change 120 W		
1,501~3,000		Constant speed 90 W Speed change 120 W	

Motor projection dimension

●Constant speed (mm)

Motor output \ Belt width	100	150
60W	85	35
90W	100	50

●Speed change (mm)

Motor output \ Belt width	100	150
120W	2	—

TYPE 34-T1 Tilted model

34-frame

Aluminum frame | **Center drive** | **Light weight model**

The model smoothly carries things from the tilted surface to the horizontal surface without making a connection.
A vertical groove belt for slopes is used as standard, and the drive part is also movable. Therefore, the conveyor can be installed to slopes or horizontal places depending on the application.
The angle can also be adjusted easily based on the layout.

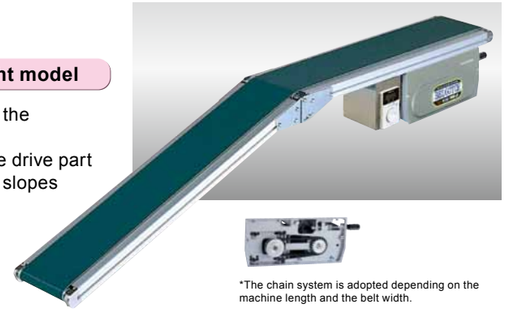

*The chain system is adopted depending on the machine length and the belt width.

*The legs are available as option.
See the option page(the standard color is silver).

Standard belt (enlarged view)

The speed change model equipped with a brushless DC motor and a control unit as standard.

The maximum rotation speed of 4,000 r/min and a velocity ratio of 1:37.5 (80 to 3,000 r/min) can be set.
The motor speed is displayed on the monitor.

SELECT How to select a model

Type34	T1	250	2,000	T8	C60
Number/ frame thickness (mm)	T: Tilted/ model name 1: Center drive	Belt width (mm)	Machine length (mm)	Constant speed/T Speed change/B Number/ speed symbol	A (100 VAC, single phase) B (200 VAC, single phase) C (200 VAC, three phase) Number/motor output (60 W/90 W/120 W)

SIZE Standard specifications

(Unit: mm)

Belt width (nominal)	100	150	200	250	300	350	400	500
Machine width	140	190	240	290	340	390	440	540
Machine length	1,500	2,000	2,500	3,000	4,000			

Machine height	169	Power	100 VAC (single phase) 200 VAC (single phase) 200 VAC (three phase)
Belt speed	Constant speed Speed change	Belt (standard)	Polyurethane belt for slopes (Green color, compliant with food standards, antistatic treatment done)
Transport capacity	See the transport capacity graph.	Option	Legs, guide, etc.
Rated output	Constant speed 60 W, 90 W Speed change 120 W		

● The actual belt width becomes narrower than the above nominal belt width by 5 mm, and by 10 mm in the case of models with a belt width of 400 and 500.
● The slope angle can be adjusted up to 30° steplessly.

DRAWING

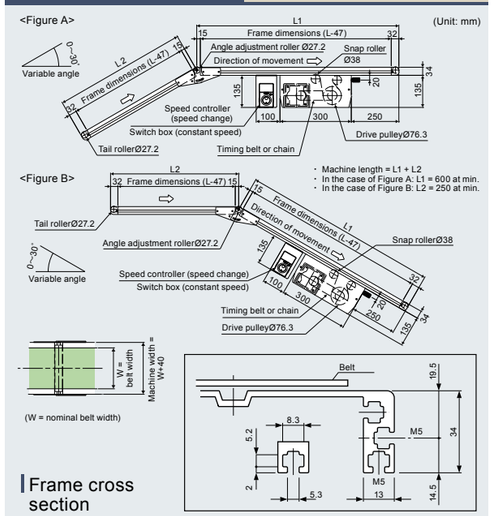

Frame cross section

DATA

Transport capacity graph (constant speed)

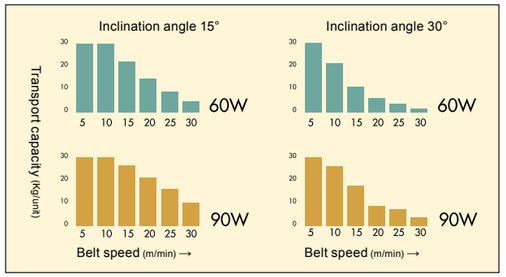

■ Weight of items to be carried: 10 kg/m2 at max.
■ The graph shows the capacity when the loads are dispersed horizontally. Carry items at the setting of 40% or below.
■ The transport capacity fluctuates depending on various factors.

Belt speed table

Reduction ratio	Speed symbol	Constant speed (m/min) 50/60(Hz)	Reduction ratio	Speed symbol	Speed change (m/min) 50・60(Hz)
1/180	T1	1.9/2.3	1/200	B1	0.1～3.4
1/150	T2	2.3/2.7			
1/120	T3	2.8/3.4	1/100	B2	0.2～6.8
1/100	T4	3.4/4.1			
1/90	T5	3.8/4.5			
1/75	T6	4.6/5.5			
1/60	T7	5.7/6.8	1/50	B3	0.4～13.6
1/50	T8	6.8/8.2			
1/36	T9	9.5/11.4			
1/30	T10	11.4/13.7	1/30	B4	0.6～22.7
1/25	T11	13.7/16.4			
1/18	T12	19.0/22.8			
1/15	T13	22.8/27.3	1/20	B5	1.0～34.1
1/12.5	T14	27.3/32.8			

■ The constant belt speed is calculated by the motor speed of 1,500/1,800 rpm (50/60 Hz), drive pulley diameter of Ø 76.3, and drive efficiency of 95%.
■ The belt speed of speed change is calculated by the motor speed of 80 rpm to 3,000 rpm (50・60 Hz), drive pulley diameter of Ø 76.3, and drive efficiency of 95%.
■ The speed change type is recommended when the speed needs to be selected accurately.
■ Speed change 120 W and speed symbols B1 to B4 are chain drive [ ]. Others are timing belt drive.

Standard setting motor output table (mm)

Machine length \ Belt width	100~250	300~400	500
1,500~2,000	Constant speed 60 W Speed change 120 W		
2,001~4,000		Constant speed 90 W Speed change 120 W	

Switch box projection dimension (mm)

Nominal belt width	100
Projection dimension	18

*Common to constant speed and speed change

Motor projection dimension

●Constant speed (mm)

Motor output \ Belt width	100	150
60W	85	35
90W	100	50

●Speed change (mm)

Motor output \ Belt width	100	150
120W	14 (2)((20))	—

*( ) For a reduction ratio of 1/20
*(( )) For a reduction ratio of 1/200

TYPE 34-V1 Troughed belt model

34-frame

Aluminum frame | **Center drive** | **Light weight model**

The belt surface is troughed at the center, and this allows carrying small things and particulate works that are likely to be spilled without fail.The right and left belt support plates can easily be removed for cleaning etc.

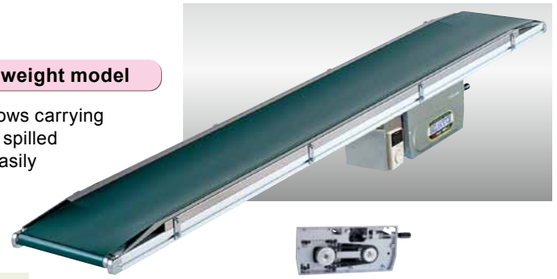

*The chain system is adopted depending on the machine length and the belt width.

*The legs are available as option.
See the option page(the standard color is silver).

Standard belt (enlarged view)

The speed change model equipped with a brushless DC motor and a control unit as standard.

The maximum rotation speed of 4,000 r/min and a velocity ratio of 1:37.5 (80 to 3,000 r/min) can be set.
The motor speed is displayed on the monitor.

SELECT How to select a model

Type34	V1	300	2,000	T8	C60
Number/ frame thickness (mm)	V: Troughed belt/ model name 1: Center drive	Belt width (mm)	Machine length (mm)	Constant speed/T Speed change/B Number/ speed symbol	A (100 VAC, single phase) B (200 VAC, single phase) C (200 VAC, three phase) Number/motor output (60 W/120 W)

SIZE Standard specifications

(Unit: mm)

Belt width (nominal)	200	250	300	350	400	500
Machine width	240	290	340	390	440	540
Machine length	1,000	1,500	2,000	2,500	3,000	4,000	5,000	6,000

Machine height 169
Belt speed Constant speed / Speed change
Transport capacity See the transport capacity graph.
Rated output Constant speed 60 W / Speed change 120 W
Power 100 VAC (single phase) / 200 VAC (single phase) / 200 VAC (three phase)
Belt (standard) Polyurethane belt (Green color, compliant with food standards, antistatic treatment done)
Option Legs, guide, etc.

●The actual belt width becomes narrower than the above nominal belt width by 10 mm.

DRAWING

(Unit: mm)

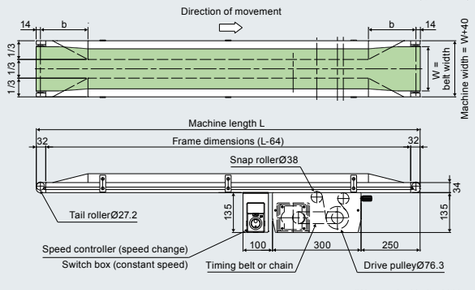

(W = nominal belt width)

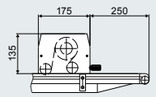

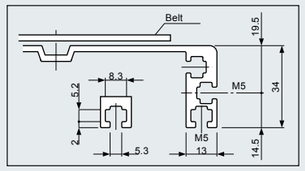

Frame cross section

DATA

Transport capacity graph (constant speed)

machine length 3,000, belt width 300

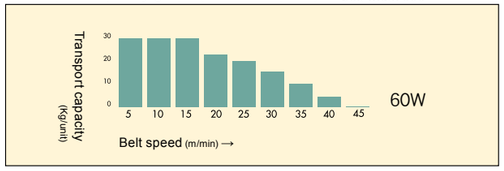

■ The graph shows the capacity when the loads are dispersed horizontally. Carry items at the setting of 40% or below.
■ The transport capacity fluctuates depending on various factors.

Troughed part dimensions

(mm)

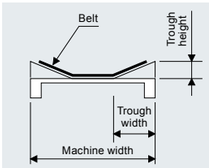

Belt width	Dimension b	Trough height	Trough width
200	170	22	80
250	175	25	100
300	210	30	115
350	245	35	130
400	280	40	150
500	350	45	180

Belt speed table

Reduction ratio	Speed symbol	Constant speed (m/min) 50/60(Hz)	Reduction ratio	Speed symbol	Speed change (m/min) 50・60(Hz)
1/180	T1	1.9/2.3	1/200	B1	0.1～3.4
1/150	T2	2.3/2.7			
1/120	T3	2.8/3.4	1/100	B2	0.2～6.8
1/100	T4	3.4/4.1			
1/90	T5	3.8/4.5			
1/75	T6	4.6/5.5			
1/60	T7	5.7/6.8	1/50	B3	0.4～13.6
1/50	T8	6.8/8.2			
1/36	T9	9.5/11.4			
1/30	T10	11.4/13.7	1/30	B4	0.6～22.7
1/25	T11	13.7/16.4			
1/18	T12	19.0/22.8			
1/15	T13	22.8/27.3	1/20	B5	1.0～34.1
1/12.5	T14	27.3/32.8			
1/9	T15	37.9/45.5	1/15	B6	1.2～45.5

■ The constant belt speed is calculated by the motor speed of 1,500/1,800 rpm (50/60 Hz), drive pulley diameter of Ø 76.3, and drive efficiency of 95%.
■ The belt speed of speed change is calculated by the motor speed of 80 rpm to 3,000 rpm (50・60 Hz), drive pulley diameter of Ø 76.3, and drive efficiency of 95%.
■ The speed change type is recommended when the speed needs to be selected accurately.
■ Speed change 120 W and speed symbols B1 to B4 are chain drive [ ]. Others are timing belt drive.

Standard setting motor output table (mm)

Machine length \ Belt width	200～500
1,000～6,000	Constant speed 60 W Speed change 120 W

TYPE 34-RG1 Roller edge meander-less model

34-frame

Aluminum frame | **Center drive** | **Light weight model**

Dimension R at both ends of the conveyor is 8 mm, and the model allows smooth transfer.
A meander-less belt is adopted for the roller edge.
Stable conveyance with less deviation is realized.
Use the conveyor for items with a length of 40 mm or more.
Entrance, exit, and one-side conveyors can also be made.

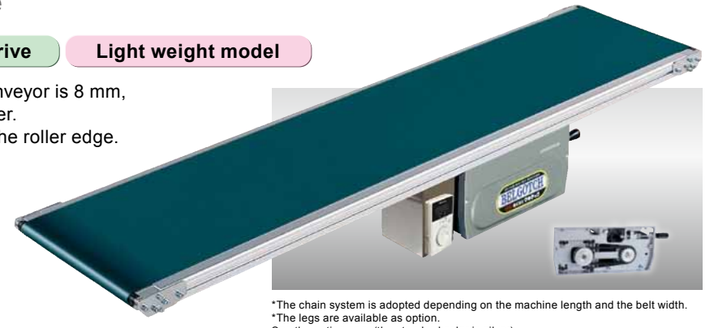

*The chain system is adopted depending on the machine length and the belt width.
*The legs are available as option.
See the option page(the standard color is silver).

SELECT How to select a model

Type34	RG1-W	250	3,500	T3	A60
Number/ frame thickness (mm)	RG: Roller edge meander-less/ model name 1: Center drive RG1-I: One side (entrance side roller edge) RG1-O: One side (exit side roller edge) RG1-W: Both side roller edge	Belt width (mm)	Machine length (mm)	Constant speed/T Speed change/B Number/ speed symbol	A (100 VAC, single phase) B (200 VAC, single phase) C (200 VAC, three phase) Number/motor output (60W・90W・120W)

SIZE Standard specifications

(Unit: mm)

Belt width (nominal)	100	150	200	250	300	400	500
Machine width	140	190	240	290	340	440	540
Machine length	1,000	1,500	2,000	2,500	3,000

Machine height 169
Belt speed Constant speed / Speed change
Transport capacity 15 kg/unit (when the loads are dispersed horizontally), up to 300 W
10 kg/unit (when the loads are dispersed horizontally), 400 W
8 kg/unit (when the loads are dispersed horizontally), 500 W
Rated output Constant speed 60 W, 90 W / Speed change 120 W
Power 100 VAC (single phase) / 200 VAC (single phase) / 200 VAC (three phase)
Belt (standard) Polyurethane belt (Green color, compliant with food standards, antistatic treatment done)
Option Legs, guide, etc.

●The actual belt width becomes narrower than the above nominal belt width by 10 mm.
●The standard type has a roller edge on both sides.
●When bag items are to be carried, the transport capacity must be set to 40% or below.

DRAWING

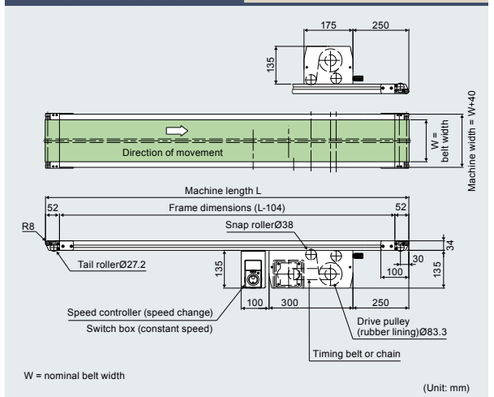

W = nominal belt width

(Unit: mm)

DATA

Belt speed table

Reduction ratio	Speed symbol	Constant speed (m/min) 50/60(Hz)	Reduction ratio	Speed symbol	Speed change (m/min) 50・60(Hz)
1/180	T1	2.0/2.5	1/200	B1	0.1～3.7
1/150	T2	2.5/2.9			
1/120	T3	3.1/3.7	1/100	B2	0.2～7.4
1/100	T4	3.7/4.4			
1/90	T5	3.1/4.9			
1/75	T6	4.9/5.9			
1/60	T7	6.1/7.4	1/50	B3	0.4～14.9
1/50	T8	7.4/8.8			
1/36	T9	10.2/12.3			
1/30	T10	12.3/14.7	1/30	B4	0.7～24.8
1/25	T11	14.7/17.7			

■ The constant belt speed is calculated by the motor speed of 1,500/1,800 rpm (50/60 Hz), drive pulley diameter of Ø 83.3, and drive efficiency of 95%.
■ The change belt speed is calculated by the motor speed of 80 rpm to 3,000 rpm (50・60 Hz), drive pulley diameter of Ø 83.3, and drive efficiency of 95%.
■ The speed change type is recommended when the speed needs to be selected accurately.
■ Speed change 120 W and speed symbols B1 to B4 are chain drive [ ]. Others are timing belt drive.

Standard setting motor output table (mm)

Machine length \ Belt width	100～200	250～300	400～500
1,000～3,000	Constant speed 60 W Speed change 120 W		Constant speed 90 W Speed change 120 W

Switch box projection dimension (mm)

Nominal belt width	100
Projection dimension	18

*Common to constant speed and speed change

Motor projection dimension

●Constant speed (mm)

Motor output \ Belt width	100	150
60W	85	35
90W	100	50

●Speed change (mm)

Motor output \ Belt width	100	150
120W	14 (2) ((20))	—

*( ) For a reduction ratio of 1/20
*(( )) For a reduction ratio of 1/200

Roller edge part

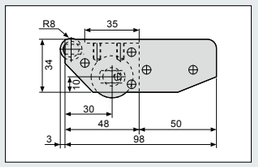

TYPE 34-K1 Knife edge model

34-frame

Aluminum frame | Center drive | Light weight model

The 3-mm end R has a sharp edge, and the model allows smooth transfer of small things that are about 20 mm.
The standard specification has a knife edge on one side.

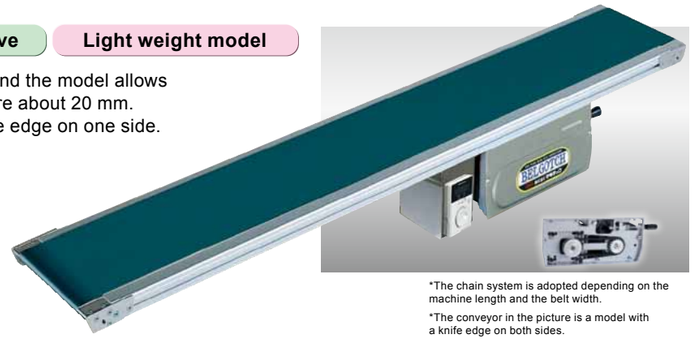

*The chain system is adopted depending on the machine length and the belt width.
*The conveyor in the picture is a model with a knife edge on both sides.
*The legs are available as option.
See the option page(the standard color is silver).

SELECT How to select a model

Type34	K1-O	250	3,500	T3	C60
Number/ frame thickness (mm)	K: Knife edge model 1: Center drive K1- I: One side (entrance side knife edge) K1-O: One side (exit side knife edge) K1-W: Both side knife edge	Belt width (mm)	Machine length (mm)	Constant speed/T Speed change/B Number/ speed symbol	A (100 VAC, single phase) B (200 VAC, single phase) C (200 VAC, three phase) Number/motor output (60 W/90 W/120 W)

SIZE Standard specifications

(Unit: mm)

Belt width (nominal)	100	150	200	250	300	400	500
Machine width	140	190	240	290	340	440	540
Machine length	1,000	1,500	2,000	2,500	3,000		

*In the case of the model with a knife edge on both sides, the maximum belt width is 300 and the maximum machine length is 3,000.

Machine height 169
Belt speed Constant speed / Speed change
Transport capacity 10 kg/unit (when the loads are dispersed horizontally)
Rated output Constant speed 60 W, 90 W / Speed change 120 W
Power 100 VAC (single phase) / 200 VAC (single phase) / 200 VAC (three phase)
Belt (standard) Polyurethane belt (Green color, compliant with food standards, antistatic treatment done)
Option Legs, guide, etc.

- The actual belt width becomes narrower than the above nominal belt width by 10 mm.
- When bag items are to be carried, the transport capacity must be set to 40% of the above or below.

DRAWING

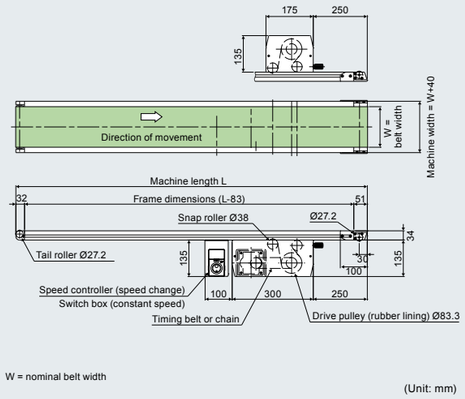

W = nominal belt width

(Unit: mm)

DATA

Belt speed table

Reduction ratio	Speed symbol	Constant speed (m/min) 50/60(Hz)	Reduction ratio	Speed symbol	Speed change (m/min) 50・60(Hz)
1/180	T1	2.0/2.5	1/200	B1	0.1～3.7
1/150	T2	2.5/2.9			
1/120	T3	3.1/3.7	1/100	B2	0.2～7.4
1/100	T4	3.7/4.4			
1/90	T5	3.1/4.9			
1/75	T6	4.9/5.9			
1/60	T7	6.1/7.4	1/50	B3	0.4～14.9
1/50	T8	7.4/8.8			
1/36	T9	10.2/12.3			
1/30	T10	12.3/14.7	1/30	B4	0.7～24.8
1/25	T11	14.7/17.7			

■ The constant belt speed is calculated by the motor speed of 1,500/1,800 rpm (50/60 Hz), drive pulley diameter of Ø 83.3, and drive efficiency of 95%.
■ The change belt speed is calculated by the motor speed of 80 rpm to 3,000 rpm (50・60 Hz), drive pulley diameter of Ø 83.3, and drive efficiency of 95%.
■ The speed change type is recommended when the speed needs to be selected accurately.
■ Speed change 120 W and speed symbols B1 to B4 are chain drive [ ]. Others are timing belt drive.

Standard setting motor output table

(mm)

Machine length \ Belt width	100～200	250～300	400～500
1,000～3,000	Constant speed 60 W Speed change 120 W		Constant speed 90 W Speed change 120 W

Switch box projection dimension

(mm)

Nominal belt width	100
Projection dimension	18

*Common to constant speed and speed change

Motor projection dimension

●Constant speed (mm)

Motor output \ Belt width	100	150
60W	85	35
90W	100	50

●Speed change (mm)

Motor output \ Belt width	100	150
120W	14 (2) ((20))	—

*( ) For a reduction ratio of 1/20
*(( )) For a reduction ratio of 1/200

Knife edge part

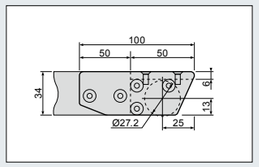

MAKITECH DRIVEN CONVEYOR

TYPE 34-J1 Joint model

34-frame

Aluminum frame | Center drive | Light weight model

A model with a short machine length that is optimum for connecting conveyance between processes.
The minimum machine length is 300 mm.

*The timing belt system is adopted for the constant speed and speed change of 60 W.
*The chain system is adopted depending on the machine length and the belt width.

*The legs are available as option. See the option page (the standard color is silver).

SELECT How to select a model

Type34	J1	100	300	B3	B60
Number/ frame thickness (mm)	J: Joint/ model name 1: Center drive	Belt width (mm)	Machine length (mm)	Constant speed/T Speed change/B Number/ speed symbol	A (100 VAC, single phase) B (200 VAC, single phase) C (200 VAC, three phase) Number/motor output (25 W/40 W/60 W)

SIZE Standard specifications

(Unit: mm)

Belt width (nominal)	50	75	100	150	200		
	250	300	350	400	500		
Machine width	90	115	140	190	240		
	290	340	390	440	540		
Machine length	300	500	1,000	1,500	2,000	2,500	3,000

Machine height 250
Belt speed Constant speed / Speed change
Transport capacity 15 kg/unit (when the loads are dispersed horizontally)
Rated output Constant speed 25 W, 40 W / Speed change 60 W
Power 100 VAC (single phase) / 200 VAC (single phase) / 200 VAC (three phase)
Belt (standard) Polyurethane belt (Green color, compliant with food standards, antistatic treatment done)
Option Legs, guide, etc.

- The actual belt width becomes narrower than the above nominal belt width by 5 mm.
- When bag items are to be carried, the transport capacity must be set to 40% of the above or below.

DRAWING

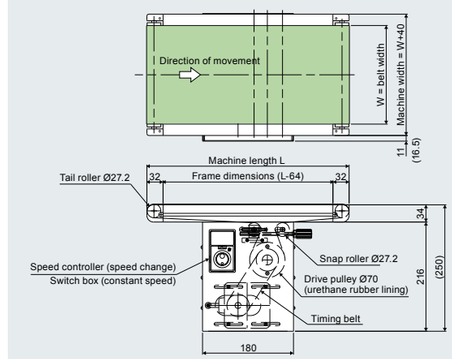

W = nominal belt width
( ) Speed change BMU dimension

(Unit: mm)

DATA

Belt speed table

Reduction ratio	Speed symbol	Constant speed (m/min) 50/60(Hz)	Reduction ratio	Speed symbol	Speed change (m/min) 50・60(Hz)
1/180	T1	1.7/2.1	1/200	B1	0.1～3.1
1/150	T2	2.1/2.3			
1/120	T3	2.6/3.1			
1/100	T4	3.1/3.7	1/100	B2	0.2～6.3
1/90	T5	3.5/4.1			
1/75	T6	4.2/5.0			
1/60	T7	5.2/6.2	1/50	B3	0.3～12.5
1/50	T8	6.2/7.5			
1/36	T9	8.7/10.4			
1/30	T10	10.4/12.5	1/30	B4	0.6～20.8
1/25	T11	12.6/15.0			
1/18	T12	17.4/21.0			
1/15	T13	21.0/25.0	1/20	B5	0.9～31.3
1/12.5	T14	25.0/30.0			
1/9	T15	34.6/41.7	1/15	B6	1.1～41.7

■ The constant belt speed is calculated by the motor speed of 1,500/1,800 rpm (50/60 Hz), drive pulley diameter of Φ 70, and drive efficiency of 95%.
■ The belt speed of speed change is calculated by the motor speed of 80 rpm to 3,000 rpm (50・60 Hz), drive pulley diameter of Φ 70, and drive efficiency of 95%.
■ The speed change type is recommended when the speed needs to be selected accurately.
■ The pulley and the motor work together by the timing belt system in the case of a constant speed and a speed change BMU 60 W motor.

Standard setting motor output table

(mm)

Machine length \ Belt width	50～200	250～500
300～3,000	Constant speed 25 W speed change 60 W	Constant speed 40 W speed change 60 W

Motor projection dimension

●Constant speed (mm)

Motor output \ Belt width	50	75	100
25W	62.5(52)	37.5(27)	12.5(2)
40W	100(82)	75(57)	50(32)

*( ) For a reduction ratio of 1/9 to 1/18

●Speed change (mm)

Motor output \ Belt width	50	75
60W	32(27) ((37))	7(1) ((12))

*( ) For a reduction ratio of 1/15 or 1/20
*(( )) For a reduction ratio of 1/200

Controller projection dimension

(mm)

	50	75
Nominal belt width		
Projection dimension for constant speed	5	0
Projection dimension for speed change	40	15

*Dimension of the exposed wiring is not included.

TYPE 34-JG1 Joint model

34-frame

Aluminum frame | **Center drive** | **Light weight model**

The meander-less model of the joint model TYPE 34-J1. It supports severe conditions such as forward and reverse operations and installation to places where it is difficult to perform maintenance inspection.

*The chain system is adopted depending on the machine length and the belt width.

*The legs are available as option. See the option page (the standard color is silver).

SELECT How to select a model

Type34	JG1	150	500	B6	C60
Number/ frame thickness (mm)	JG: Joint meander-less/ model name 1: Center drive	Belt width (mm)	Machine length (mm)	Constant speed/T Speed change/B Number/ speed symbol	A (100 VAC, single phase) B (200 VAC, single phase) C (200 VAC, three phase) Number/motor output (40 W/60 W/120 W)

SIZE Standard specifications

(Unit: mm)

Belt width (nominal)	75	100	150	200	250		
	300	350	400	500			
Machine width	115	140	190	240	290		
	340	390	440	540			
Machine length	300	500	1,000	1,500	2,000	2,500	3,000

Machine height 250
Belt speed Constant speed / Speed change
Transport capacity 15 kg/unit (when the loads are dispersed horizontally)
Rated output Constant speed 40 W, 60 W / Speed change 60 W, 120 W
Power 100 VAC (single phase) / 200 VAC (single phase) / 200 VAC (three phase)
Belt (standard) Polyurethane belt (Green color, compliant with food standards, antistatic treatment done)
Option Legs, guide, etc.

- The actual belt width becomes narrower than the above nominal belt width by 5 mm.
- When bag items are to be carried, the transport capacity must be set to 40% of the above or below.

DRAWING

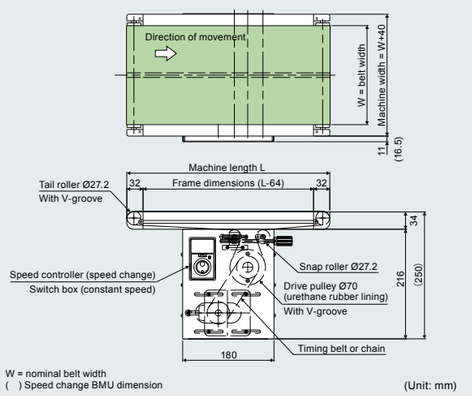

W = nominal belt width
( ) Speed change BMU dimension
(Unit: mm)

DATA

Belt speed table

Reduction ratio	Speed symbol	Constant speed (m/min) 50/60(Hz)	Reduction ratio	Speed symbol	Speed change (m/min) 50・60(Hz)
1/180	T1	1.7/2.1	1/200	B1	0.1～3.1
1/150	T2	2.1/2.3			
1/120	T3	2.6/3.1			
1/100	T4	3.1/3.7	1/100	B2	0.2～6.3
1/90	T5	3.5/4.1			
1/75	T6	4.2/5.0			
1/60	T7	5.2/6.2	1/50	B3	0.3～12.5
1/50	T8	6.2/7.5			
1/36	T9	8.7/10.4			
1/30	T10	10.4/12.5	1/30	B4	0.6～20.8
1/25	T11	12.6/15.0			
1/18	T12	17.4/21.0			
1/15	T13	21.0/25.0	1/20	B5	0.9～31.3
1/12.5	T14	25.0/30.0			
1/9	T15	34.6/41.7	1/15	B6	1.1～41.7

■ The constant belt speed is calculated by the motor speed of 1,500/1,800 rpm (50/60 Hz), drive pulley diameter of Ø 70, and drive efficiency of 95%.
■ The change belt speed is calculated by the motor speed of 80 rpm to 3,000 rpm (50・60 Hz), drive pulley diameter of Ø 70, and drive efficiency of 95%.
■ The speed change type is recommended when the speed needs to be selected accurately.
■ Speed change 120 W and speed symbols B1 to B4 are chain drive [ ]. Others are timing belt drive.

Standard setting motor output table

(mm)

Machine length \ Belt width	75～250	300～500
300～3,000	Constant speed 40 W speed change 60 W	Constant speed 60 W speed change 120 W

Motor projection dimension

●Constant speed (mm)

Motor output \ Belt width	75	100	150
40W	75(57)	50(32)	—
60W	101	76	26

*( ) For a reduction ratio of 1/9 to 1/18

●Speed change (mm)

Motor output \ Belt width	75
60W	—
120W	6(0)((12))

*( ) For a reduction ratio of 1/15 or 1/20
*(( )) For a reduction ratio of 1/200

Controller projection dimension (mm)

Nominal belt width	75
Projection dimension	15

*Dimension of the exposed wiring is not included.

TYPE 34-S2 Standard model

34-frame

Aluminum frame | **Head drive** | **Light weight model**

The roller does not roll in the belt surface, and the conveyor is suitable for carrying items that get dirty easily.The upper part drive type should be used when there is a small amount of water or oil.

*The chain system is adopted for the belt width of 50 W and 75 W.
*The effective clearance from the motor to the belt upper surface of the upper part drive type is 100 mm (95 mm in the case of 120 W).
*The legs are available as option.
See the option page (the standard color is silver).

Standard belt (enlarged view)

Drive part position

*The effective clearance from the motor to the belt upper surface of the upper part drive type is 100 mm (95 mm in the case of 120 W).

The speed change model equipped with a brushless DC motor and a control unit as standard.

The maximum rotation speed of 4,000 r/min and a velocity ratio of 1:37.5 (80 to 3,000 r/min) can be set.
The motor speed is displayed on the monitor.

SELECT How to select a model

Type34	S2U	200	1,000	B4	A60
Number/ frame thickness (mm)	S: Standard/ model name 2: Head drive U: Upper part drive type D: Lower part drive type	Belt width (mm)	Machine length (mm)	Constant speed/T Speed change/B Number/ speed symbol	A (100 VAC, single phase) B (200 VAC, single phase) C (200 VAC, three phase) Number/motor output (40 W/60 W/120 W)

SIZE Standard specifications

(Unit: mm)

Belt width (nominal)	50	75	100	150	200	250	300	350	400	500	600
Machine width	90	115	140	190	240	290	340	390	440	540	640
Machine length	1,000	1,500	2,000	2,500	3,000	3,500	4,000	4,500	5,000	5,500	6,000

Machine height 280
Belt speed Constant speed / Speed change
Transport capacity See the transport capacity graph.
Rated output Constant speed 40 W, 60 W / Speed change 60 W, 120 W
Power 100 VAC (single phase) / 200 VAC (single phase) / 200 VAC (three phase)
Belt (standard) Polyurethane belt (Green color, compliant with food standards, antistatic treatment done)
Option Legs, guide, etc.

●The actual belt width becomes narrower than the above belt width by 5 mm, and by 10 mm when the machine length of 4 m is exceeded and in the case of models with a belt width of 500 and 600.

DRAWING

(Unit: mm)

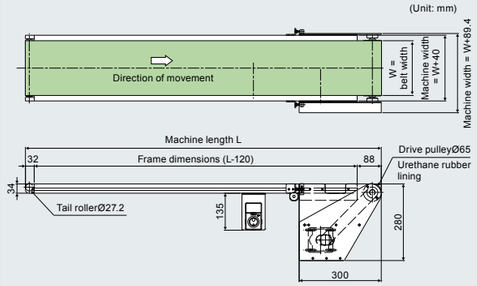

(W = nominal belt width)

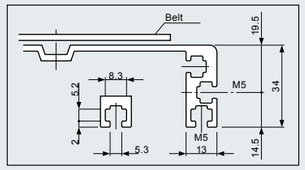

Frame cross section

DATA

Transport capacity graph (constant speed)

machine length 3,000, belt width 300

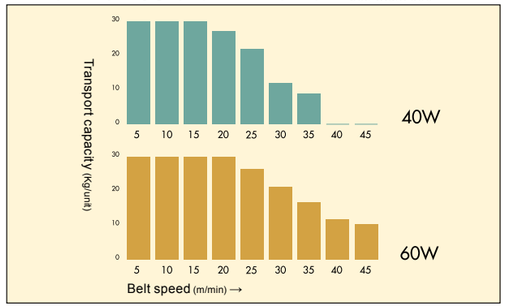

■ The graph shows the capacity when the loads are dispersed horizontally. Carry items at the setting of 40% or below.
■ The transport capacity fluctuates depending on various factors.

Belt speed table

Reduction ratio	Speed symbol	Constant speed (m/min) 50/60(Hz)	Reduction ratio	Speed symbol	Speed change (m/min) 50・60(Hz)
1/180	T1	1.6/1.9	1/200	B1	0.08～2.9
1/150	T2	1.9/2.3			
1/120	T3	2.4/2.9			
1/100	T4	2.9/3.5	1/100	B2	0.2～5.8
1/90	T5	3.2/3.9			
1/75	T6	3.9/4.6			
1/60	T7	4.8/5.8	1/50	B3	0.3～11.6
1/50	T8	5.8/7.0			
1/36	T9	8.1/9.7			
1/30	T10	9.7/11.6	1/30	B4	0.5～19.3
1/25	T11	11.6/14.0			
1/18	T12	16.2/19.4			
1/15	T13	19.4/23.3	1/20	B5	0.8～29.1
1/12.5	T14	23.3/27.9			
1/9	T15	32.3/38.8	1/15	B6	1.0～38.7

■ The constant belt speed is calculated by the motor speed of 1,500/1,800 rpm (50/60 Hz), drive pulley diameter of Ø 65, and drive efficiency of 95%.
■ The belt speed of speed change is calculated by the motor speed of 80 rpm to 3,000 rpm (50・60 Hz), drive pulley diameter of Ø 65, and drive efficiency of 95%.
■ The speed change type is recommended when the speed needs to be selected accurately.
■ Speed change 120 W and speed symbols B1 to B4 are chain drive [ ]. Others are timing belt drive.

Standard setting motor output table (mm)

Machine length \ Belt width	50～300	350～600
1,000～6,000	Constant speed 40 W Speed change 60 W	Constant speed 60 W Speed change 120 W

Switch box projection dimension (mm)

Nominal belt width	50	75	100
Projection dimension	68	43	18

*Common to constant speed and speed change

Motor projection dimension

●Constant speed (mm)

Motor output \ Belt width	50	75	100	150
40W	75(55)	50(30)	23(5)	—
60W	—	74	50	—
90W	—	89	64	14

*( ) For a reduction ratio of 1/9 to 1/18

●Speed change (mm)

Motor output \ Belt width	50	75
60W	4(3) ((10))	—
120W	25(12) ((32))	1(0) ((7))

*( ) For a reduction ratio of 1/15 or 1/20
*(( )) For a reduction ratio of 1/200

TYPE 34-G2 Meander-less model

34-frame

Aluminum frame | **Head drive** | **Light weight model**

The roller does not roll in the belt surface, and the conveyor is suitable for carrying items that get dirty easily. It also uses a belt with a guide and is suitable for conditions when the belt adjustment is difficult.

Standard belt (enlarged view)

Drive part position

*The effective clearance from the motor to the belt upper surface of the upper part drive type is 100 mm (95 mm in the case of 120 W).

*The chain system is adopted for the belt width of 50 W and 75 W.
*The effective clearance from the motor to the belt upper surface of the upper part drive type is 100 mm (95 mm in the case of 120 W).
*The legs are available as option.
See the option page (the standard color is silver).

The speed change model equipped with a brushless DC motor and a control unit as standard.

The maximum rotation speed of 4,000 r/min and a velocity ratio of 1:37.5 (80 to 3,000 r/min) can be set.
The motor speed is displayed on the monitor.

SELECT How to select a model

Type34 - G2D - 300 - 2,500 - T3 - C60

- Type34: Number/frame thickness (mm)
- G2D: G: Meander-less/model name; 2: Head drive; U: Upper part drive type; D: Lower part drive type
- 300: Belt width (mm)
- 2,500: Machine length (mm)
- T3: Constant speed/T Speed change/B Number/speed symbol
- C60: A (100 VAC, single phase); B (200 VAC, single phase); C (200 VAC, three phase); Number/motor output (40 W/60 W/120 W)

SIZE Standard specifications

(Unit: mm)

Belt width (nominal)	50	75	100	150	200	250	300	350	400	500	600
Machine width	90	115	140	190	240	290	340	390	440	540	640
Machine length	1,000	1,500	2,000	2,500	3,000	3,500	4,000	4,500	5,000	5,500	6,000

Machine height | 280
Belt speed | Constant speed; Speed change
Transport capacity | See the transport capacity graph.
Rated output | Constant speed 40 W, 60 W; Speed change 60 W, 120 W
Power | 100 VAC (single phase); 200 VAC (single phase); 200 VAC (three phase)
Belt (standard) | Polyurethane belt with guide (Green color, compliant with food standards, antistatic treatment done)
Option | Legs, guide, etc.

●The actual belt width becomes narrower than the above belt width by 5 mm, and by 10 mm when the machine length of 4 m is exceeded and in the case of models with a belt width of 500 and 600.

DRAWING

(Unit: mm)

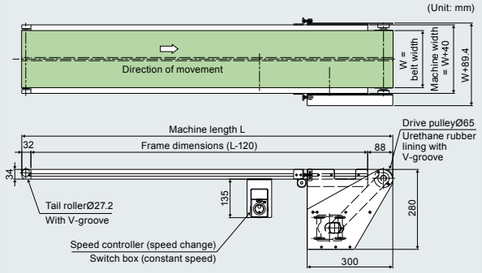

(W = nominal belt width)

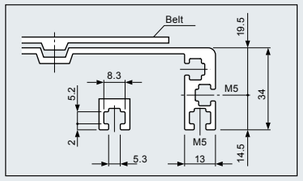

Frame cross section

DATA

Transport capacity graph (constant speed)

machine length 3,000, belt width 300

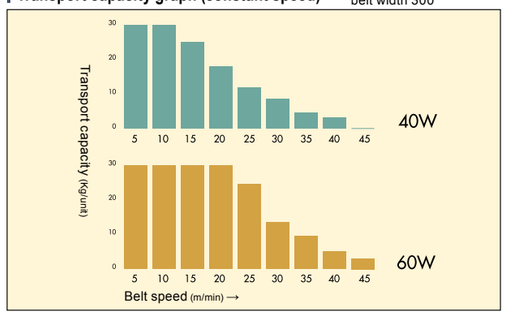

■ The graph shows the capacity when the loads are dispersed horizontally. Carry items at the setting of 40% or below.
■ The transport capacity fluctuates depending on various factors.

Belt speed table

Reduction ratio	Speed symbol	Constant speed (m/min) 50/60(Hz)	Reduction ratio	Speed symbol	Speed change (m/min) 50・60(Hz)
1/180	T1	1.6/1.9	1/200	B1	0.08～2.9
1/150	T2	1.9/2.3			
1/120	T3	2.4/2.9			
1/100	T4	2.9/3.5	1/100	B2	0.2～5.8
1/90	T5	3.2/3.9			
1/75	T6	3.9/4.6			
1/60	T7	4.8/5.8	1/50	B3	0.3～11.6
1/50	T8	5.8/7.0			
1/36	T9	8.1/9.7			
1/30	T10	9.7/11.6	1/30	B4	0.5～19.3
1/25	T11	11.6/14.0			
1/18	T12	16.2/19.4			
1/15	T13	19.4/23.3	1/20	B5	0.8～29.1
1/12.5	T14	23.3/27.9			
1/9	T15	32.3/38.8	1/15	B6	1.0～38.7

■ The constant belt speed is calculated by the motor speed of 1,500/1,800 rpm (50/60 Hz), drive pulley diameter of Ø 65, and drive efficiency of 95%.
■ The belt speed of speed change is calculated by the motor speed of 80 rpm to 3,000 rpm (50・60 Hz), drive pulley diameter of Ø 65, and drive efficiency of 95%.
■ The speed change type is recommended when the speed needs to be selected accurately.
■ Speed change 120 W and speed symbols B1 to B4 are chain drive ▭. Others are timing belt drive.

Standard setting motor output table (mm)

Machine length \ Belt width	50～250	300～600
1,000～6,000	Constant speed 40 W Speed change 60 W	Constant speed 60 W Speed change 120 W

Switch box projection dimension (mm)

Nominal belt width	50	75	100
Projection dimension	68	43	18

*Common to constant speed and speed change

Motor projection dimension

●Constant speed (mm)

Motor output \ Belt width	50	75	100	150
40W	75(55)	50(30)	23(5)	—
60W	—	74	50	—
90W	—	89	64	14

*( ) For a reduction ratio of 1/9 to 1/18

●Speed change (mm)

Motor output \ Belt width	50	75
60W	4(3)	—
120W	25(12) ((32))	1(0) ((8))

*( ) For a reduction ratio of 1/15 or 1/20
*(( )) For a reduction ratio of 1/200

TYPE 34-D2 Belt cleat model

34-frame

Aluminum frame | **Head drive** | **Light weight model**

A belt cleat and a guide (with a height of 30 mm) are used as standard.
The conveyor can be used for inclined conveyance of bulk solids and things with an unstable shape or for pitch feeding at a horizontal surface.

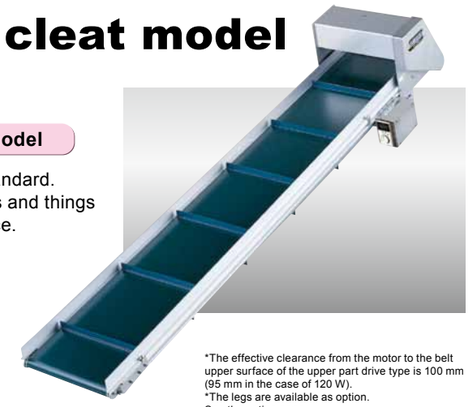

*The effective clearance from the motor to the belt upper surface of the upper part drive type is 100 mm (95 mm in the case of 120 W).
*The legs are available as option.
See the option page (the standard color is silver).

Standard belt (enlarged view)

Drive part position

*The effective clearance from the motor to the belt upper surface of the upper part drive type is 100 mm (95 mm in the case of 120 W).

The speed change model equipped with a brushless DC motor and a control unit as standard.

The maximum rotation speed of 4,000 r/min and a velocity ratio of 1:37.5 (80 to 3,000 r/min) can be set.
The motor speed is displayed on the monitor.

SELECT How to select a model

Type34 - D2U - 250 - 1,500 - T5 - B60

- Type34: Number/frame thickness (mm)
- D2U: D: Belt cleat/model name; 2: Head drive; U: Upper part drive type; D: Lower part drive type
- 250: Belt width (mm)
- 1,500: Machine length (mm)
- T5: Constant speed/T Speed change/B Number/speed symbol
- B60: A (100 VAC, single phase); B (200 VAC, single phase); C (200 VAC, three phase); Number/motor output (60 W/120 W)

SIZE Standard specifications

(Unit: mm)

Belt width (nominal)	100	150	200	250	300	350	400	500
Machine width	140	190	240	290	340	390	440	540
Machine length	1,000	1,500	2,000	2,500	3,000			

Machine height | 280
Belt speed | Constant speed; Speed change
Transport capacity | See the transport capacity graph.
Rated output | Constant speed 60 W; Speed change 120 W
Power | 100 VAC (single phase); 200 VAC (single phase); 200 VAC (three phase)
Belt (standard) | Polyurethane belt cleat (Green color, compliant with food standards, antistatic treatment done)
Option | Legs, etc.

●The actual belt width becomes narrower than the above nominal belt width by 5 mm.

DRAWING

(Unit: mm)

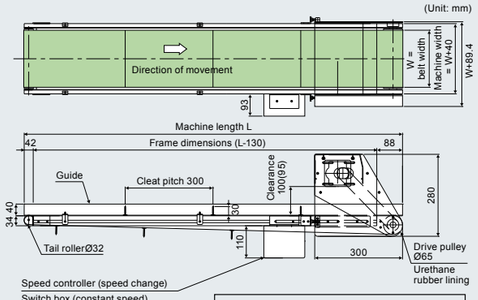

(W = nominal belt width)
( ) For 120W

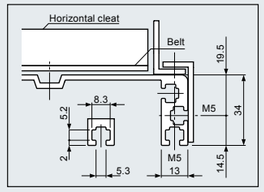

Frame cross section

DATA

Transport capacity graph (at the time of constant speed and inclination angle of 20°)

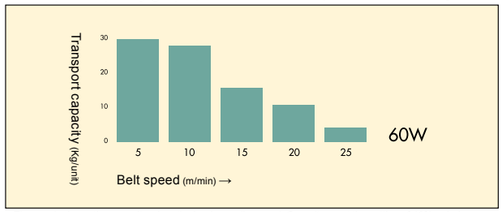

■ The graph shows the capacity when the loads are dispersed. Carry items at the setting of 40% or below.
■ The transport capacity fluctuates depending on various factors.
■ Weight of items to be carried: 10 kg/m at max.

DATA

Belt speed table

Reduction ratio	Speed symbol	Constant speed (m/min) 50/60(Hz)	Reduction ratio	Speed symbol	Speed change (m/min) 50・60(Hz)
1/180	T1	1.6/1.9	1/200	B1	0.08～2.9
1/150	T2	1.9/2.3			
1/120	T3	2.4/2.9			
1/100	T4	2.9/3.5	1/100	B2	0.2～5.8
1/90	T5	3.2/3.9			
1/75	T6	3.9/4.6			
1/60	T7	4.8/5.8	1/50	B3	0.3～11.6
1/50	T8	5.8/7.0			
1/36	T9	8.1/9.7			
1/30	T10	9.7/11.6	1/30	B4	0.5～19.3
1/25	T11	11.6/14.0			
1/18	T12	16.2/19.4			
1/15	T13	19.4/23.3	1/20	B5	0.8～29.1
1/12.5	T14	23.3/27.9			

■ The constant belt speed is calculated by the motor speed of 1,500/1,800 rpm (50/60 Hz), drive pulley diameter of Ø 65, and drive efficiency of 95%.
■ The belt speed of speed change is calculated by the motor speed of 80 rpm to 3,000 rpm (50・60 Hz), drive pulley diameter of Ø 65, and drive efficiency of 95%.
■ The speed change type is recommended when the speed needs to be selected accurately.
■ Speed change 120 W and speed symbols B1 to B4 are chain drive ▭. Others are timing belt drive.

Standard setting motor output table (mm)

Machine length \ Belt width	100～500
1,000～3,000	Constant speed 60 W Speed change 120 W

Motor projection dimension

●Constant speed (mm)

Motor output \ Belt width	100	150
60W	45	—

*In the case of speed change, there is no motor projection.

Belt cleat dimension (standard item)

(The cleat pitch is around 300 mm when the entire belt is divided equally.)

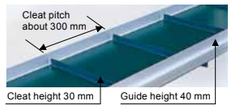

●Cleat dimensions below can also be made. (mm)

Pitch	100・150・200・250・400
Height	10・20・40

TYPE 34-V2 Troughed belt model

34-frame

Aluminum frame | Head drive | Light weight model

The hull-shaped belt type model that can carry small things and particulate works that are likely to be spilled without fail.
The upper part drive type should be used when the items to be carried contain water or oil.

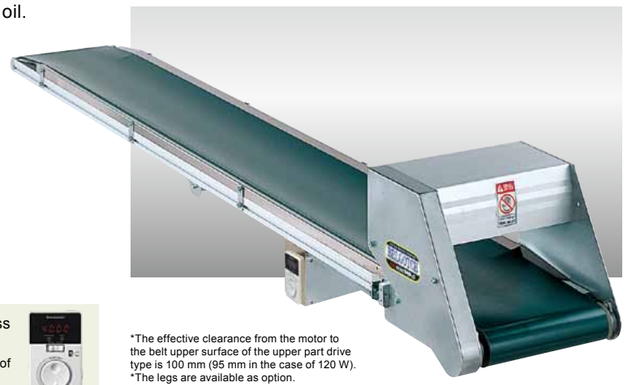

*The effective clearance from the motor to the belt upper surface of the upper part drive type is 100 mm (95 mm in the case of 120 W).
*The legs are available as option.
See the option page
(the standard color is silver)

Drive part position

Upper part drive type (U)

Lower part drive type (D)

*The effective clearance from the motor to the belt upper surface of the upper part drive type is 100 mm (95 mm in the case of 120 W).

The speed change model equipped with a brushless DC motor and a control unit as standard.

The maximum rotation speed of 4,000 r/min and a velocity ratio of 1:37.5 (80 to 3,000 r/min) can be set.
The motor speed is displayed on the monitor.

SELECT How to select a model

Type34	V2U	400	3,000	T7	C60
Number/ frame thickness (mm)	V: Troughed belt/ model name 2: Head drive U: Upper part drive type D: Lower part drive type	Belt width (mm)	Machine length (mm)	Constant speed/T Speed change/B Number/ speed symbol	A (100 VAC, single phase) B (200 VAC, single phase) C (200 VAC, three phase) Number/motor output (60 W/120 W)

SIZE Standard specifications

(Unit: mm)

Belt width (nominal)	200	250	300	350	400	500
Machine width	240	290	340	390	440	540
Machine length	1,000～5,000					

Machine height 280
Belt speed Constant speed / Speed change
Transport capacity 25 kg/unit (when the loads are dispersed horizontally)
Rated output Constant speed 60 W / Speed change 120 W
Power 100 VAC (single phase) / 200 VAC (single phase) / 200 VAC (three phase)
Belt (standard) Polyurethane belt (Green color, compliant with food standards, antistatic treatment done)
Option Legs, guide, etc.

●The actual belt width becomes narrower than the above nominal belt width by 10 mm.
●The transport capacity fluctuates depending on various factors.

DRAWING

(Unit: mm)

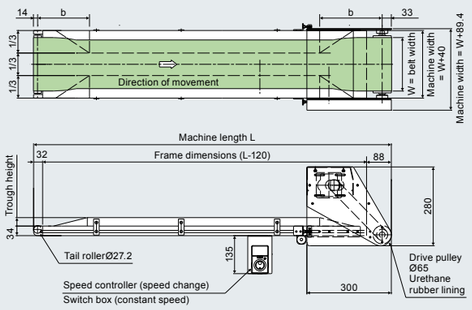

(W = nominal belt width)

DATA

Belt speed table

Reduction ratio	Speed symbol	Constant speed (m/min) 50/60(Hz)	Reduction ratio	Speed symbol	Speed change (m/min) 50・60(Hz)
1/180	T1	1.6/1.9	1/200	B1	0.08～2.9
1/150	T2	1.9/2.3			
1/120	T3	2.4/2.9	1/100	B2	0.2～5.8
1/100	T4	2.9/3.5			
1/90	T5	3.2/3.9			
1/75	T6	3.9/4.6			
1/60	T7	4.8/5.8	1/50	B3	0.3～11.6
1/50	T8	5.8/7.0			
1/36	T9	8.1/9.7			
1/30	T10	9.7/11.6	1/30	B4	0.5～19.3
1/25	T11	11.6/14.0			
1/18	T12	16.2/19.4			
1/15	T13	19.4/23.3	1/20	B5	0.8～29.1
1/12.5	T14	23.3/27.9			

■ The constant belt speed is calculated by the motor speed of 1,500/1,800 rpm (50/60 Hz), drive pulley diameter of Ø 65, and drive efficiency of 95%.
■ The belt speed of speed change is calculated by the motor speed of 80 rpm to 3,000 rpm (50・60 Hz), drive pulley diameter of Ø 65, and drive efficiency of 95%.
■ The speed change type is recommended when the speed needs to be selected accurately.
■ Speed change 120 W and speed symbols B1 to B4 are chain drive ▭ . Others are timing belt drive.

Troughed part dimensions

(Unit: mm)

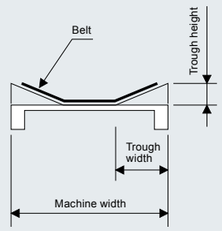

Belt width	Dimension b	Trough height	Trough width
200	170	22	80
250	175	25	100
300	210	30	115
350	245	35	130
400	280	40	150
500	350	45	180

MAKITECH DRIVEN CONVEYOR

TYPE 34-RG2 Roller edge meander-less model

34-frame

Aluminum frame | Head drive | Light weight model

The loading side of the conveyor is R8, and the model allows smooth transfer.
Stable conveyance with less deviation is realized by adopting a meander-less belt for the roller edge.
Use the conveyor for connection to a large conveyor.
(The roller edge part is on one side only.)

*The effective clearance from the motor to the belt upper surface of the upper part drive type is 100 mm (95 mm in the case of 120 W).
*The legs are available as option.
See the option page
(the standard color is silver)

Drive part position

Upper part drive type (U)

Lower part drive type (D)

*The effective clearance from the motor to the belt upper surface of the upper part drive type is 100 mm (95 mm in the case of 120 W).

SELECT How to select a model

Type34	RG2D	050	2,000	T2	C60
Number/ frame thickness (mm)	RG: Roller edge/ model name 2: Head drive U: Upper part drive type D: Lower part drive type	Belt width (mm)	Machine length (mm)	Constant speed/T Speed change/B Number/ speed symbol	A (100 VAC, single phase) B (200 VAC, single phase) C (200 VAC, three phase) Number/motor output (60 W/90 W/120 W)

SIZE Standard specifications

(Unit: mm)

Belt width (nominal)	100	150	200	250	300	350	400	500
Machine width	140	190	240	290	340	390	440	540
Machine length	1,000		1,500		2,000		2,500	3,000

Machine height 280
Belt speed Constant speed / Speed change
Transport capacity 15 kg/unit (when the loads are dispersed horizontally), up to 300 W / 10 kg/unit (when the loads are dispersed horizontally), 400 W / 8 kg/unit (when the loads are dispersed horizontally), 500 W
Rated output Constant speed 60 W, 90 W / Speed change 120 W
Power 100 VAC (single phase) / 200 VAC (single phase) / 200 VAC (three phase)
Belt (standard) Polyurethane belt (White/green color, compliant with food standards, antistatic treatment done)
Option Legs, guide, etc.

● The actual belt width becomes narrower than the above nominal belt width by 10 mm.
● When bag items are to be carried, the transport capacity must be set to 40% of the above or below.

DRAWING

(Unit: mm)

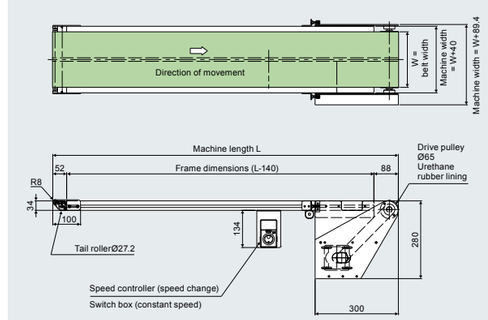

(W = nominal belt width)

DATA

Belt speed table

Reduction ratio	Speed symbol	Constant speed (m/min) 50/60(Hz)	Reduction ratio	Speed symbol	Speed change (m/min) 50・60(Hz)
1/180	T1	1.6/1.9	1/200	B1	0.08～2.9
1/150	T2	1.9/2.3			
1/120	T3	2.4/2.9	1/100	B2	0.2～5.8
1/100	T4	2.9/3.5			
1/90	T5	3.2/3.9			
1/75	T6	3.9/4.6			
1/60	T7	4.8/5.8	1/50	B3	0.3～11.6
1/50	T8	5.8/7.0			
1/36	T9	8.1/9.7			
1/30	T10	9.7/11.6	1/30	B4	0.5～19.3
1/25	T11	11.6/14.0			
1/18	T12	16.2/19.4			

■ The constant belt speed is calculated by the motor speed of 1,500/1,800 rpm (50/60 Hz), drive pulley diameter of Ø 65, and drive efficiency of 95%.
■ The belt speed of speed change is calculated by the motor speed of 80 rpm to 3,000 rpm (50・60 Hz), drive pulley diameter of Ø 65, and drive efficiency of 95%.
■ The speed change type is recommended when the speed needs to be selected accurately.
■ Speed change 120 W and speed symbols B1 to B4 are chain drive ▭ . Others are timing belt drive.

Standard setting motor output table

(mm)

Machine length \ Belt width	100～300	400～500
1,000～3,000	Constant speed 60 W Speed change 120 W	Constant speed 90 W Speed change 120 W

Switch box projection dimension

(mm)

Nominal belt width	100
Projection dimension	18

*Common to constant speed and speed change

Motor projection dimension

●Constant speed (mm)

Motor output \ Belt width	100	150
60W	45	—
90W	60	10

*In the case of speed change, there is no motor projection.

Roller edge part

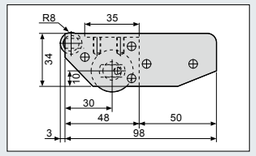

TYPE 34-K2 Knife edge model

34-frame

Aluminum frame | **Head drive** | **Light weight model**

A conveyor for carrying small things
(with a length of 20 or more)
that have an R3 plate used on the loading side.
(The knife edge part is on one side only.)

*The effective clearance from the motor to the belt upper surface of the upper part drive type is 100 mm (95 mm in the case of 120 W).
*The legs are available as option.
See the option page
(the standard color is silver).

Drive part position

Upper part drive type (U)

Lower part drive type (D)

*The effective clearance from the motor to the belt upper surface of the upper part drive type is 100 mm (95 mm in the case of 120 W).

SELECT How to select a model

Type34	K2U	350	3,000	T4	C90
Number/ frame thickness (mm)	K: Knife edge/ model name 2: Head drive U: Upper part drive type D: Lower part drive type	Belt width (mm)	Machine length (mm)	Constant speed/T Speed change/B Number/ speed symbol	A (100 VAC, single phase) B (200 VAC, single phase) C (200 VAC, three phase) Number/motor output (60 W/90 W/120 W)

SIZE Standard specifications

(Unit: mm)

Belt width (nominal)	100	150	200	250	300	350	400	500
Machine width	140	190	240	290	340	390	440	540
Machine length	1,000		1,500		2,000		2,500	3,000

Machine height 280
Belt speed Constant speed
Speed change
Transport capacity 10 kg/unit (when the loads are dispersed horizontally)
Rated output Constant speed 60 W, 90 W
Speed change 120 W
Power 100 VAC (single phase)
200 VAC (single phase)
200 VAC (three phase)
Belt (standard) Polyurethane belt (White/green color, compliant with food standards, antistatic treatment done)
Option Legs, guide, etc.

- The actual belt width becomes narrower than the above nominal belt width by 10 mm.
- When bag items are to be carried, the transport capacity must be set to 40% of the above or below.

DRAWING

(Unit: mm)

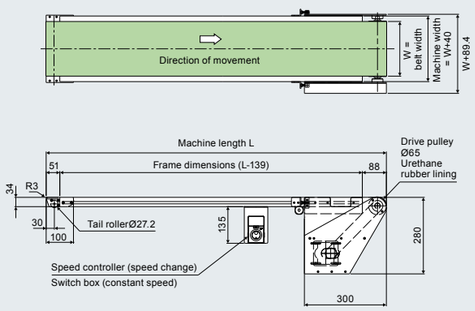

(W = nominal belt width)

DATA

Belt speed table

Reduction ratio	Speed symbol	Constant speed (m/min) 50/60(Hz)	Reduction ratio	Speed symbol	Speed change (m/min) 50・60(Hz)
1/180	T1	1.6/1.9	1/200	B1	0.08～2.9
1/150	T2	1.9/2.3			
1/120	T3	2.4/2.9	1/100	B2	0.2～5.8
1/100	T4	2.9/3.5			
1/90	T5	3.2/3.9			
1/75	T6	3.9/4.6			
1/60	T7	4.8/5.8	1/50	B3	0.3～11.6
1/50	T8	5.8/7.0			
1/36	T9	8.1/9.7			
1/30	T10	9.7/11.6	1/30	B4	0.5～19.3
1/25	T11	11.6/14.0			
1/18	T12	16.2/19.4			

■ The constant belt speed is calculated by the motor speed of 1,500/1,800 rpm (50/60 Hz), drive pulley diameter of Ø 65, and drive efficiency of 95%.
■ The belt speed of speed change is calculated by the motor speed of 80 rpm to 3,000 rpm (50・60 Hz), drive pulley diameter of Ø 65, and drive efficiency of 95%.
■ The speed change type is recommended when the speed needs to be selected accurately.
■ Speed change 120 W and speed symbols B1 to B4 are chain drive . Others are timing belt drive.

Standard setting motor output table

(mm)

Machine length \ Belt width	100～300	400～500
1,000～3,000	Constant speed 60 W Speed change 120 W	Constant speed 90 W Speed change 120 W

Switch box projection dimension

(mm)

Nominal belt width	100
Projection dimension	18

*Common to constant speed and speed change

Motor projection dimension

●Constant speed (mm)

Motor output \ Belt width	100	150
60W	45	—
90W	60	10

*In the case of speed change, there is no motor projection.

Knife edge part

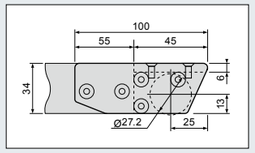

MAKITECH DRIVEN CONVEYOR

TYPE 60-S1 Standard model

60-frame

Aluminum frame | **Center drive** | **Light weight model**

The general-purpose model of the Belgotch series that uses
a 60-frame with enhanced strength and have no projection to
the frame side surface of the drive part.

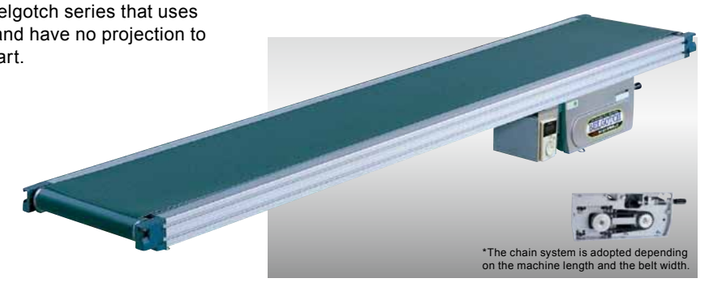

*The chain system is adopted depending on the machine length and the belt width.

*The legs are available as option. See the option page
(the standard color is silver).

Standard belt (enlarged view)

SELECT How to select a model

Type60	S1	300	4,000	B4	C120
Number/ frame thickness (mm)	S: Standard/ model name 1: Center drive	Belt width (mm)	Machine length (mm)	Constant speed/T Speed change/B Number/ speed symbol	A (100 VAC, single phase) B (200 VAC, single phase) C (200 VAC, three phase) Number/motor output (60 W/90 W/120 W)

SIZE Standard specifications

(Unit: mm)

Belt width (actual dimension)	200	250	300	350	400	500	600	(700)	(800)
Machine width	280	330	380	430	480	580	680	(780)	(880)
Machine length	500	1,000	2,000	3,000	4,000	5,000	6,000	7,000	8,000

(The type with a belt width of 700 or 800 is a substandard item.)

Machine height 195
Belt speed Constant speed
Speed change
Transport capacity See the transport capacity graph.
Rated output Constant speed 60 W, 90 W
Speed change 120 W
Power 100 VAC (single phase)
200 VAC (single phase)
200 VAC (three phase)
Belt (standard) Polyurethane belt (Green color, compliant with food standards, antistatic treatment done)
Option Legs, guide, etc.

●When the machine length is 6 m or above, an intermediate take-up unit comes with the conveyor.

DRAWING

(Unit: mm)

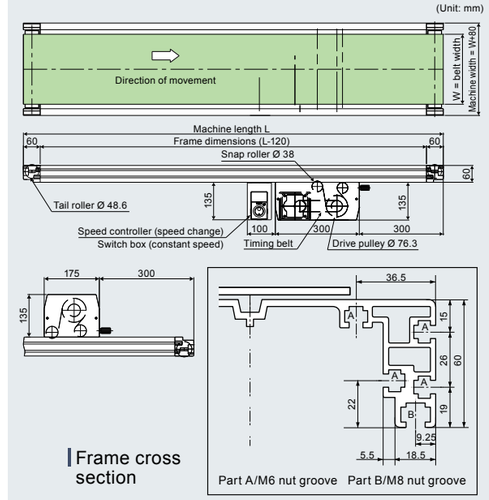

Frame cross section

DATA

Transport capacity graph (constant speed)

machine length 3,000, belt width 300

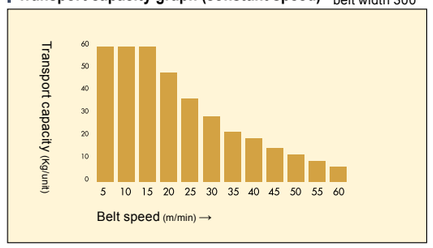

■ The graph shows the capacity when the loads are dispersed horizontally. Carry items at the setting of 40% or below.
■ The model with a belt width of 500 or 600 exhibits about 80% of the above transport capacity.
■ The transport capacity fluctuates depending on various factors.

Belt speed table

Reduction ratio	Speed symbol	Constant speed (m/min) 50/60(Hz)	Reduction ratio	Speed symbol	Speed change (m/min) 50・60(Hz)
1/180	T1	1.9/2.3	1/200	B1	0.1～3.4
1/150	T2	2.3/2.7			
1/120	T3	2.8/3.4	1/100	B2	0.2～6.8
1/100	T4	3.4/4.1			
1/90	T5	3.8/4.5			
1/75	T6	4.6/5.5			
1/60	T7	5.7/6.8	1/50	B3	0.4～13.6
1/50	T8	6.8/8.2			
1/36	T9	9.5/11.4			
1/30	T10	11.4/13.7	1/30	B4	0.6～22.7
1/25	T11	13.7/16.4			
1/18	T12	19.0/22.8			
1/15	T13	22.8/27.3	1/20	B5	1.0～34.1
1/12.5	T14	27.3/32.8			
1/9	T15	37.9/45.5	1/15	B6	1.2～45.5

■ The constant belt speed is calculated by the motor speed of 1,500/1,800 rpm (50/60 Hz), drive pulley diameter of Ø 76.3, and drive efficiency of 95%.
■ The belt speed of speed change is calculated by the motor speed of 80 rpm to 3,000 rpm (50・60 Hz), drive pulley diameter of Ø 76.3, and drive efficiency of 95%.
■ The speed change type is recommended when the speed needs to be selected accurately.
■ Speed change 120 W and speed symbols B1 to B4 are chain drive . Others are timing belt drive.

Standard setting motor output table

(mm)

Machine length \ Belt width	200～300	350～800
500～4,000	Constant speed 60 W speed change 120 W	Constant speed 90 W speed change 120 W
4,001～8,000		

TYPE 60-G1 Meander-less model

60-frame

Aluminum frame | Center drive | Light weight model

The general-purpose model of the Belgotch series that uses a 60-frame with enhanced strength and have no projection to the frame side surface of the drive part.

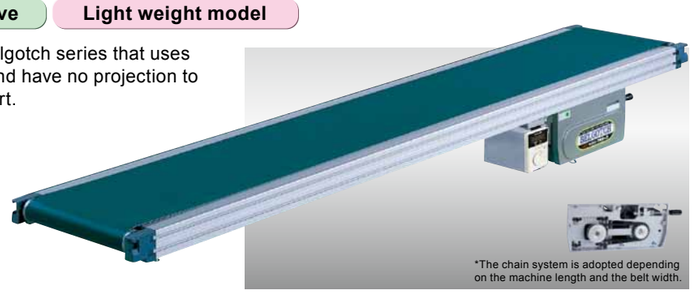

*The legs are available as option. See the option page (the standard color is silver).

Standard belt (enlarged view)

SELECT How to select a model

Type60	G1	400	3,000	T5	C90
Number/ frame thickness (mm)	G: Meander-less/ model name 1: Center drive	Belt width (mm)	Machine length (mm)	Constant speed/T Speed change/B Number/ speed symbol	A (100 VAC, single phase) B (200 VAC, single phase) C (200 VAC, three phase) Number/motor output (90 W, 120 W)

The speed change model equipped with a brushless DC motor and a control unit as standard.

The maximum rotation speed of 4,000 r/min and a velocity ratio of 1:37.5 (80 to 3,000 r/min) can be set.
The motor speed is displayed on the monitor.

SIZE Standard specifications

(Unit: mm)

Belt width (actual dimension)	200	250	300	350	400	500	600	(700)	(800)
Machine width	280	330	380	430	480	580	680	(780)	(880)
Machine length	500	1,000	2,000	3,000	4,000	5,000	6,000	7,000	8,000

(The type with a belt width of 700 or 800 is a substandard item.)

Machine height 195
Belt speed Constant speed / Speed change
Transport capacity See the transport capacity graph.
Rated output Constant speed 90 W / Speed change 120 W
Power 100 VAC (single phase) / 200 VAC (single phase) / 200 VAC (three phase)
Belt (standard) Polyurethane belt (Green color, compliant with food standards, antistatic treatment done)
Option Legs, guide, etc.

●When the machine length is 6 m or above, an intermediate take-up unit comes with the conveyor.

DATA

Transport capacity graph (constant speed) machine length 3,000, belt width 300

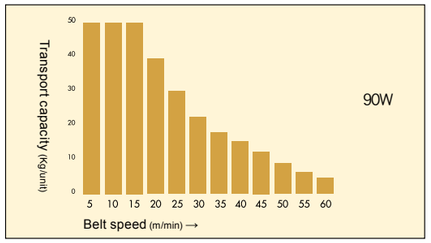

■ The graph shows the capacity when the loads are dispersed horizontally. Carry items at the setting of 40% or below.
■ The model with a belt width of 500 or 600 exhibits about 80% of the above transport capacity.
■ The transport capacity fluctuates depending on various factors.

Belt speed table

Reduction ratio	Speed symbol	Constant speed (m/min) 50/60(Hz)	Reduction ratio	Speed symbol	Speed change (m/min) 50・60(Hz)
1/180	T1	1.9/2.3	1/200	B1	0.1～3.4
1/150	T2	2.3/2.7			
1/120	T3	2.8/3.4	1/100	B2	0.2～6.8
1/100	T4	3.4/4.1			
1/90	T5	3.8/4.5			
1/75	T6	4.6/5.5			
1/60	T7	5.7/6.8	1/50	B3	0.4～13.6
1/50	T8	6.8/8.2			
1/36	T9	9.5/11.4			
1/30	T10	11.4/13.7	1/30	B4	0.6～22.7
1/25	T11	13.7/16.4			
1/18	T12	19.0/22.8			
1/15	T13	22.8/27.3	1/20	B5	1.0～34.1
1/12.5	T14	27.3/32.8			
1/9	T15	37.9/45.5	1/15	B6	1.2～45.5

■ The constant belt speed is calculated by the motor speed of 1,500/1,800 rpm (50/60 Hz), drive pulley diameter of Ø 76.3, and drive efficiency of 95%.
■ The belt speed of speed change is calculated by the motor speed of 80 rpm to 3,000 rpm (50・60 Hz), drive pulley diameter of Ø 76.3, and drive efficiency of 95%.
■ The speed change type is recommended when the speed needs to be selected accurately.
■ Speed change 120 W and speed symbols B1 to B4 are chain drive ▭. Others are timing belt drive.

Standard setting motor output table (mm)

Machine length \ Belt width	200～800
500～8,000	Constant speed 90 W Speed change 120 W

DRAWING

(Unit: mm)

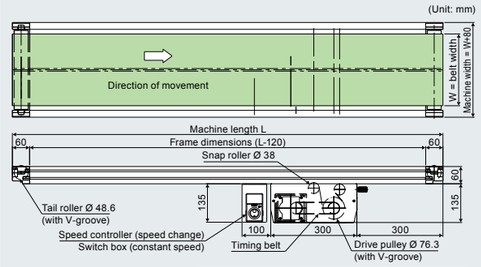

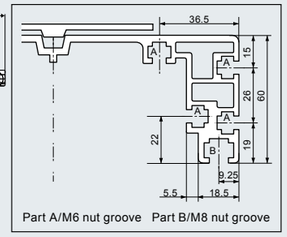

Frame cross section

TYPE 60-SZ1P,GZ1P Standard model/ strong type model

60-frame

Aluminum frame | Center drive | Light weight model

The model is renewed by adopting a flange unit for the drive pulley axis receiving part. The strong type conveyor that allows easy maintenance because of its simple structure.
The meander-less model has a cleat for preventing meander on the back side of the belt and performs stable conveyance.

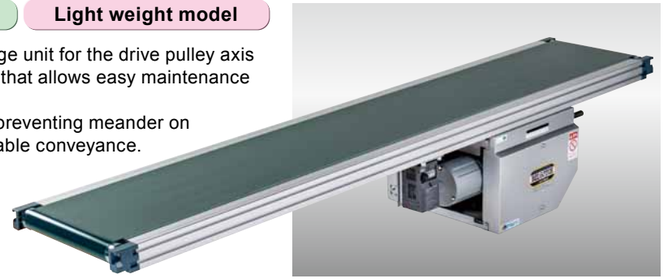

*The legs are available as option. See the option page (the standard color is silver).

Drive part side surface cover on L side

Drive part side surface cover on R side

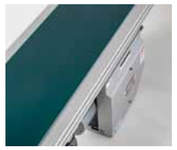

SELECT How to select a model

Type60	SZ1P	300	3,000	F6	C100
Number/ frame thickness (mm)	SZ: Standard/ strong type/ model name GZ: Meander-less/ strong type/model name 1: Center drive	Belt width (mm)	Machine length (mm)	Speed change/F Number/ speed symbol	A (100 VAC, single phase) B (200 VAC, single phase) C (200 VAC, three phase) Number/motor output (100 W/200 W)

SIZE Standard specifications

(Unit: mm)

Belt width (actual dimension)	200	250	300	400	500	600	(700)	(800)
Machine width	280	330	380	480	580	680	(780)	(880)
Machine length	1,000	1,500	2,000	2,500	3,000	4,000	5,000	6,000	7,000	8,000

(The type with a belt width of 700 or 800 is a substandard item.)

Machine height 330
Belt speed Speed change
Transport capacity See the transport capacity graph.
Motor output 100W , 200W
Power 100 VAC (single phase) / 200 VAC (single phase) / 200 VAC (three phase)
Belt (standard) Polyurethane belt (Green color, compliant with food standards, antistatic treatment done)
Option Legs, guide, etc.

●When the machine length is 6 m or above, an intermediate take-up unit comes with the conveyor.

DATA

Belt speed table

Reduction ratio	Speed symbol	Constant speed (m/min) 50/60(Hz)	Motor capacity
1/200	F1	1.0～3.1	100W
1/120	F2	1.7～5.1	100W
1/100	F3	2.0～6.1	100W
1/80	F4	2.5～7.6	100W
1/50	F5	4.1～12.2	200W
1/40	F6	5.1～15.2	200W
1/30	F7	6.8～20.3	200W
1/25	F8	8.1～24.4	200W
1/20	F9	10.2～30.5	200W

■ The belt speed is calculated by the motor rated speed of 1,500/1,800 rpm (50・60 Hz), drive pulley diameter of Ø 101.6, and drive efficiency of 95%.

The speed change is done by an inverter system.

*Motors are all for three phase 200 V regardless of whether the input power is single-phase or three-phase.
*The inverter may be different from the picture.

Standard belt (enlarged view)

DRAWING

(Unit: mm)

Frame cross section

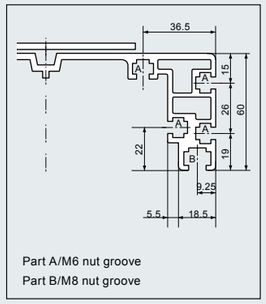

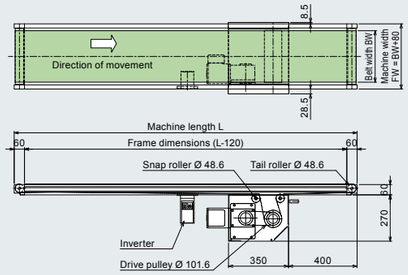

Transport capacity graph (100 W)

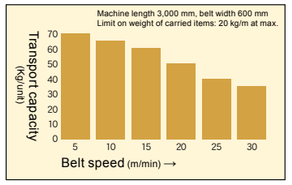

Transport capacity graph (200 W)

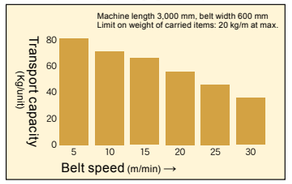

■ The graph shows the capacity when the loads are dispersed horizontally. Carry items at the setting of 40% or below.
■ The transport capacity fluctuates depending on various factors.

TYPE 60-S2 Standard model

60-frame

Aluminum frame | **Head drive** | **Light weight model**

The roller does not roll in the belt surface, and the conveyor is suitable for carrying items that get dirty easily.

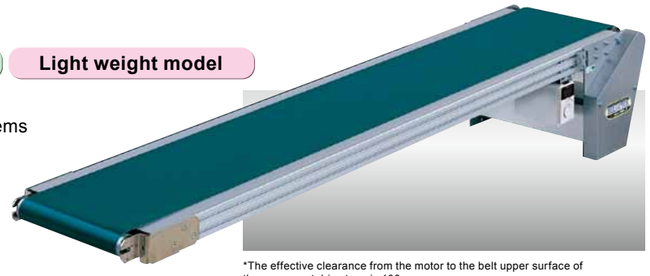

*The effective clearance from the motor to the belt upper surface of the upper part drive type is 100 mm.
*The legs are available as option. See the option page (the standard color is silver).

Standard belt (enlarged view)

Drive part position

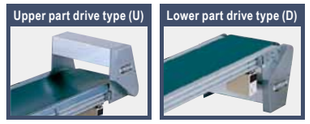

*The effective clearance from the motor to the belt upper surface of the upper part drive type is 100 mm.

The speed change model equipped with a brushless DC motor and a control unit as standard.

The maximum rotation speed of 4,000 r/min and a velocity ratio of 1:37.5 (80 to 3,000 r/min) can be set.
The motor speed is displayed on the monitor.

SELECT How to select a model

Type60 - S2D - 300 - 3,000 - T3 - C90

- Type60: Number/frame thickness (mm)
- S2D: S: Standard/model name; 2: Head drive; U: Upper part drive type; D: Lower part drive type
- 300: Belt width (mm)
- 3,000: Machine length (mm)
- T3: Constant speed/T Speed change/B Number/speed symbol
- C90: A (100 VAC, single phase) B (200 VAC, single phase) C (200 VAC, three phase) Number/motor output (90 W, 120 W)

SIZE Standard specifications

(Unit: mm)

Belt width (actual dimension)	200	250	300	400	500	600
Machine width	280	330	380	480	580	680
Machine length	1,000	1,500	2,000	2,500	3,000	3,500	4,000	5,000	6,000	7,000	8,000

Machine height	300
Belt speed	Constant speed Speed change
Transport capacity	See the transport capacity graph.
Rated output	Constant speed 90 W Speed change 120 W
Power	100 VAC (single phase) 200 VAC (single phase) 200 VAC (three phase)
Belt (standard)	Polyurethane belt (Green color, compliant with food standards, antistatic treatment done)
Option	Legs, guide, etc.

●When the machine length is 6 m or above, an intermediate take-up unit comes with the conveyor.

DATA

Belt speed table

Reduction ratio	Speed symbol	Constant speed (m/min) 50/60(Hz)	Reduction ratio	Speed symbol	Speed change (m/min) 50・60(Hz)
1/180	T1	1.9/2.3	1/200	B1	0.1～3.4
1/150	T2	2.3/2.7			
1/120	T3	2.8/3.4			
1/100	T4	3.4/4.1	1/100	B2	0.2～6.8
1/90	T5	3.8/4.5			
1/75	T6	4.6/5.5			
1/60	T7	5.7/6.8			
1/50	T8	6.8/8.2	1/50	B3	0.4～13.6
1/36	T9	9.5/11.4			
1/30	T10	11.4/13.7			
1/25	T11	13.7/16.4	1/30	B4	0.6～22.7
1/18	T12	19.0/22.8			
1/15	T13	22.8/27.3	1/20	B5	1.0～34.1
1/12.5	T14	27.3/32.8			
1/9	T15	37.9/45.5	1/15	B6	1.2～45.5

■ The constant belt speed is calculated by the motor speed of 1,500/1,800 rpm (50/60 Hz), drive pulley diameter of Ø 76.3, and drive efficiency of 95%.
■ The belt speed of speed change is calculated by the motor speed of 80 rpm to 3,000 rpm (50・60 Hz), drive pulley diameter of Ø 76.3, and drive efficiency of 95%.
■ The speed change type is recommended when the speed needs to be selected accurately.

Transport capacity graph (constant speed) machine length 3,000, belt width 300

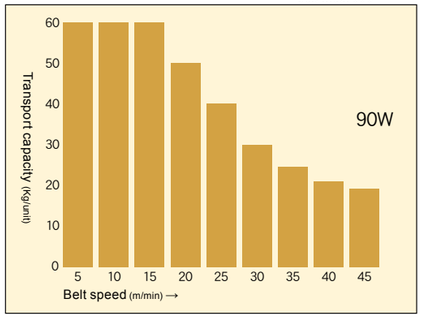

■ The graph shows the capacity when the loads are dispersed horizontally. Carry items at the setting of 40% or below.
■ The model with a belt width of 500 or 600 exhibits about 80% of the above transport capacity.
■ The transport capacity fluctuates depending on various factors.

Standard setting motor output table

(mm)

Machine length \ Belt width	200～600
1,000～8,000	Constant speed 90 W, speed change 120 W

DRAWING

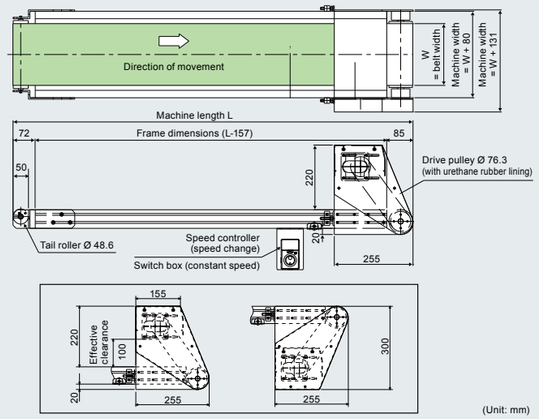

TYPE 60-G2 Meander-less model

60-frame

Aluminum frame | **Head drive** | **Light weight model**

Stable conveyance with less deviation is realized by adopting a meander-less belt.
It is suitable for places where it is difficult to perform maintenance inspection such as when the conveyor is set to other machines.

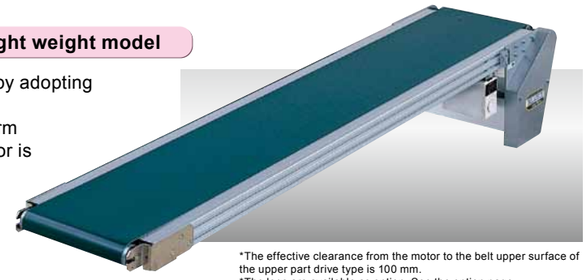

*The effective clearance from the motor to the belt upper surface of the upper part drive type is 100 mm.
*The legs are available as option. See the option page (the standard color is silver).

Standard belt (enlarged view)

Drive part position

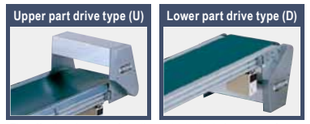

*The effective clearance from the motor to the belt upper surface of the upper part drive type is 100 mm.

The speed change model equipped with a brushless DC motor and a control unit as standard.

The maximum rotation speed of 4,000 r/min and a velocity ratio of 1:37.5 (80 to 3,000 r/min) can be set.
The motor speed is displayed on the monitor.

SELECT How to select a model

Type60 - G2D - 300 - 3,000 - T5 - C90

- Type60: Number/frame thickness (mm)
- G2D: G: Meander-less/model name; 2: Head drive; U: Upper part drive type; D: Lower part drive type
- 300: Belt width (mm)
- 3,000: Machine length (mm)
- T5: Constant speed/T Speed change/B Number/speed symbol
- C90: A (100 VAC, single phase) B (200 VAC, single phase) C (200 VAC, three phase) Number/motor output (90 W, 120 W)

SIZE Standard specifications

(Unit: mm)

Belt width (actual dimension)	200	250	300	400	500	600
Machine length	1,000	1,500	2,000	2,500	3,000	3,500	4,000	5,000	6,000	7,000	8,000

Machine height	300
Belt speed	Constant speed Speed change
Transport capacity	See the transport capacity graph.
Rated output	Constant speed 90 W Speed change 120 W
Power	100 VAC (single phase) 200 VAC (single phase) 200 VAC (three phase)
Belt (standard)	Polyurethane belt (Green color, compliant with food standards, antistatic treatment done)
Option	Legs, guide, etc.

●When the machine length is 6 m or above, an intermediate take-up unit comes with the conveyor.

DATA

Belt speed table

Reduction ratio	Speed symbol	Constant speed (m/min) 50/60(Hz)	Reduction ratio	Speed symbol	Speed change (m/min) 50・60(Hz)
1/180	T1	1.9/2.3	1/200	B1	0.1～3.4
1/150	T2	2.3/2.7			
1/120	T3	2.8/3.4			
1/100	T4	3.4/4.1	1/100	B2	0.2～6.8
1/90	T5	3.8/4.5			
1/75	T6	4.6/5.5			
1/60	T7	5.7/6.8			
1/50	T8	6.8/8.2	1/50	B3	0.4～13.6
1/36	T9	9.5/11.4			
1/30	T10	11.4/13.7			
1/25	T11	13.7/16.4	1/30	B4	0.6～22.7
1/18	T12	19.0/22.8			
1/15	T13	22.8/27.3	1/20	B5	1.0～34.1
1/12.5	T14	27.3/32.8			
1/9	T15	37.9/45.5	1/15	B6	1.2～45.5

■ The constant belt speed is calculated by the motor speed of 1,500/1,800 rpm (50/60 Hz), drive pulley diameter of Ø 76.3, and drive efficiency of 95%.
■ The belt speed of speed change is calculated by the motor speed of 80 rpm to 3,000 rpm (50・60 Hz), drive pulley diameter of Ø 76.3, and drive efficiency of 95%.
■ The speed change type is recommended when the speed needs to be selected accurately.

Transport capacity graph (constant speed) machine length 3,000, belt width 300

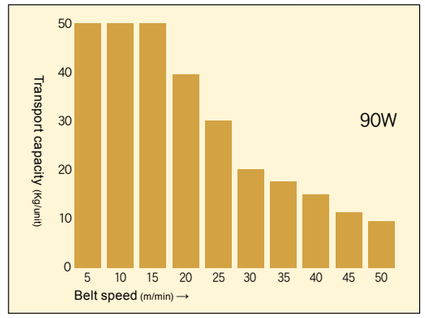

■ The graph shows the capacity when the loads are dispersed horizontally. Carry items at the setting of 40% or below.
■ The model with a belt width of 500 or 600 exhibits about 80% of the above transport capacity.
■ The transport capacity fluctuates depending on various factors.

Standard setting motor output table

(mm)

Machine length \ Belt width	200～600
1,000～8,000	Constant speed 90 W, speed change 120 W

DRAWING

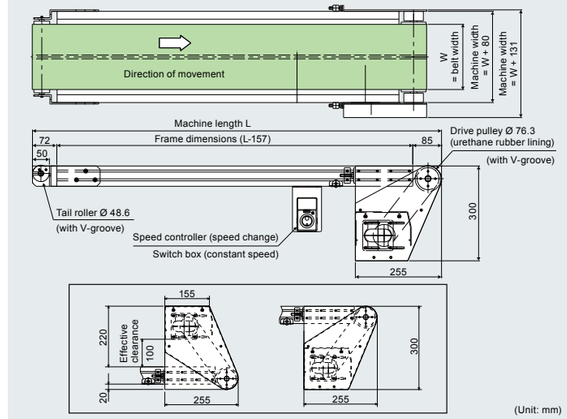

TYPE 90-S1 Standard model

90-frame

Aluminum frame | **Center drive** | **Medium weight model**

The carrier table system, which realizes stable conveyance of unstable heavy things, is adopted.

Standard belt (enlarged view)

*The legs are available as option.
See the option page (the standard color is silver).

SELECT How to select a model

Type90	S1	1,000	3,000	T6	C200
Number/ frame thickness (mm)	S: Standard/ model name 1: Center drive	Belt width (mm)	Machine length (mm)	Constant speed/T Speed change/F Number/ speed symbol	A (100 VAC, single phase) B (200 VAC, single phase) C (200 VAC, three phase) Number/motor output (100 W/200 W/400 W)

SIZE Standard specifications

(Unit: mm)

Belt width (actual dimension)	300	400	500	600	700	800	900	1,000	1,100	1,200
Machine width	400	500	600	700	800	900	1,000	1,100	1,200	1,300
Machine length	1,000	2,000	3,000	4,000	5,000	6,000	7,000	8,000	9,000	10,000

Machine height | 390
Belt speed | Constant speed / Speed change
Transport capacity | See the transport capacity graph.
Motor output | 100W, 200W, 400W
Power | 100 VAC (single phase) / 200 VAC (single phase) / 200 VAC (three phase)
Belt (standard) | Polyurethane belt(2-ply) (Green color, compliant with food standards, antistatic treatment done)
Option | Legs, guide, etc.

●When the machine length is 6 m or above, an intermediate take-up unit comes with the conveyor.

DRAWING

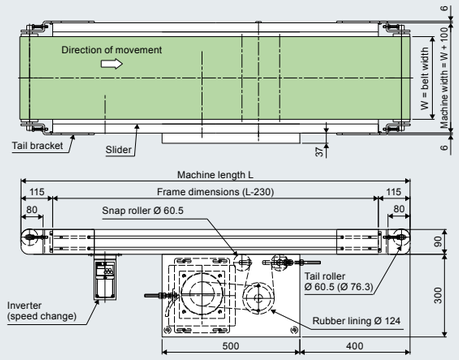

Frame cross section

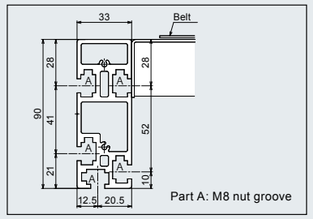

*Tail roller diameter
300～600W Ø60.5
700～1,000W Ø76.3
*The two-point switch is available as option in the case of constant speed.

(Unit: mm)

DATA

Belt speed table

Reduction ratio	Speed symbol	Constant speed (m/min) 50/60(Hz)	Speed symbol	Speed change (m/min) 50・60(Hz)
1/450	T1	1.1/1.3	F1	0.4～1.3
1/375	T2	1.3/1.6	F2	0.5～1.6
1/300	T3	1.7/2.0	F3	0.7～2.0
1/200	T4	2.5/3.0	F4	1.0～3.0
1/160	T5	3.1/3.8	F5	1.3～3.8
1/120	T6	4.2/5.0	F6	1.7～5.0
1/100	T7	5.0/6.0	F7	2.0～6.0
1/80	T8	6.3/7.5	F8	2.5～7.5
1/60	T9	8.4/10.0	F9	3.4～10.0
1/50	T10	10.0/12.1	F10	4.0～12.1
1/40	T11	12.6/15.1	F11	5.0～15.1
1/30	T12	16.7/20.1	F12	6.7～20.1
1/25	T13	20.1/24.1	F13	8.0～24.1
1/20	T14	25.1/30.1	F14	10.0～30.1

■ The belt speed is calculated by the motor speed of 1,500/1,800 rpm (50/60 Hz), drive pulley diameter of Ø 124, and drive efficiency of 95%.
■ The speed change type is recommended when the speed needs to be selected accurately.

The speed change is done by an inverter system.

*Motors are all for three phase 200 V regardless of whether the input power is single-phase or three-phase.
*The inverter may be different from the picture.

Motor selection chart

Motor output	Reduction ratio
100W	1/15～1/450
200W	1/15～1/200
400W	1/15～1/100

*Setting besides the above is not available.

Transport capacity graph (constant speed)

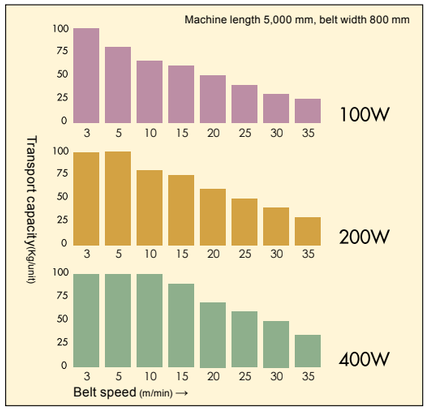

■ The graph shows the capacity when the loads are dispersed horizontally. Carry items at the setting of 40% or below.
■ The transport capacity fluctuates depending on various factors.
■ For the belt width of 1,100 W and 1,200 W, the transport weight must be set to 80% or below.

TYPE 90-G1 Meander-less model

90-frame

Aluminum frame | **Center drive** | **Medium weight model**

The carrier table system, which realizes stable conveyance of unstable heavy things, is adopted.

Standard belt (enlarged view)

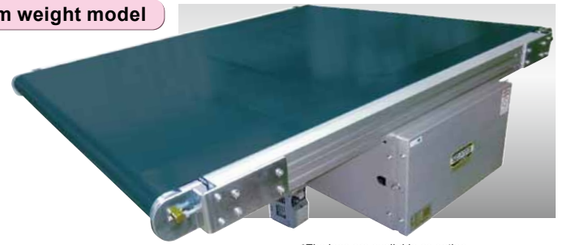

*The legs are available as option.
See the option page (the standard color is silver).

SELECT How to select a model

Type90	G1	1,000	3,000	T6	C200
Number/ frame thickness (mm)	G: Meander-less/ model name 1: Center drive	Belt width (mm)	Machine length (mm)	Constant speed/T Speed change/F Number/ speed symbol	A (100 VAC, single phase) B (200 VAC, single phase) C (200 VAC, three phase) Number/motor output (100 W/200 W/400 W)

SIZE Standard specifications

(Unit: mm)

Belt width (actual dimension)	300	400	500	600	700	800	900	1,000	1,100	1,200
Machine width	400	500	600	700	800	900	1,000	1,100	1,200	1,300
Machine length	1,000	2,000	3,000	4,000	5,000	6,000	7,000	8,000		

Machine height | 390
Belt speed | Constant speed / Speed change
Transport capacity | See the transport capacity graph.
Motor output | 100W, 200W, 400W
Power | 100 VAC (single phase) / 200 VAC (single phase) / 200 VAC (three phase)
Belt (standard) | Polyurethane belt(2-ply) (Green color, compliant with food standards, antistatic treatment done)
Option | Legs, guide, etc.

●When the machine length is 6 m or above, an intermediate take-up unit comes with the conveyor.

DRAWING

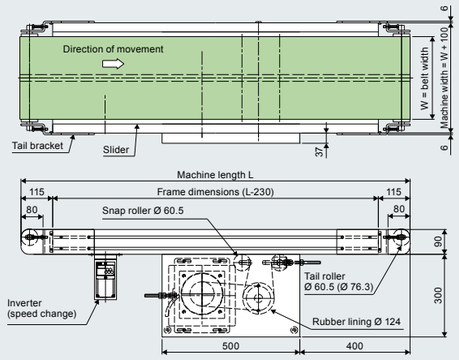

Frame cross section

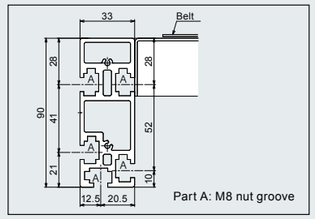

*Tail roller diameter
300～600W Ø60.5
700～1,000W Ø76.3
*The two-point switch is available as option in the case of constant speed.

(Unit: mm)

DATA

Belt speed table

Reduction ratio	Speed symbol	Constant speed (m/min) 50/60(Hz)	Speed symbol	Speed change (m/min) 50・60(Hz)
1/450	T1	1.1/1.3	F1	0.4～1.3
1/375	T2	1.3/1.6	F2	0.5～1.6
1/300	T3	1.7/2.0	F3	0.7～2.0
1/200	T4	2.5/3.0	F4	1.0～3.0
1/160	T5	3.1/3.8	F5	1.3～3.8
1/120	T6	4.2/5.0	F6	1.7～5.0
1/100	T7	5.0/6.0	F7	2.0～6.0
1/80	T8	6.3/7.5	F8	2.5～7.5
1/60	T9	8.4/10.0	F9	3.4～10.0
1/50	T10	10.0/12.1	F10	4.0～12.1
1/40	T11	12.6/15.1	F11	5.0～15.1
1/30	T12	16.7/20.1	F12	6.7～20.1
1/25	T13	20.1/24.1	F13	8.0～24.1
1/20	T14	25.1/30.1	F14	10.0～30.1

■ The belt speed is calculated by the motor speed of 1,500/1,800 rpm (50/60 Hz), drive pulley diameter of Ø 124, and drive efficiency of 95%.
■ The speed change type is recommended when the speed needs to be selected accurately.

The speed change is done by an inverter system.

*Motors are all for three phase 200 V regardless of whether the input power is single-phase or three-phase.
*The inverter may be different from the picture.

Motor selection chart

Motor output	Reduction ratio
100W	1/15～1/450
200W	1/15～1/200
400W	1/15～1/100

*Setting besides the above is not available.

Transport capacity graph (constant speed)

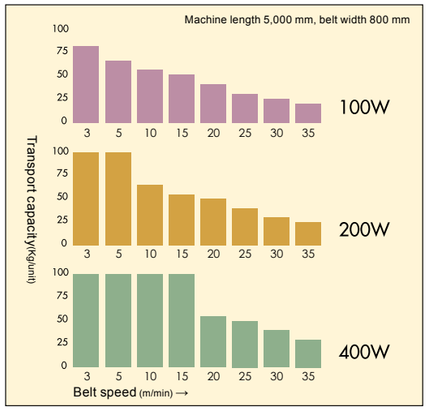

■ The graph shows the capacity when the loads are dispersed horizontally. Carry items at the setting of 40% or below.
■ The transport capacity fluctuates depending on various factors.
■ For the belt width of 1,100 W and 1,200 W, the transport weight must be set to 80% or below.

TYPE 90-S2 Standard model

90-frame

Aluminum frame | **Head drive** | **Medium weight model**

A model of the head drive S2 series for carrying heavy things.
A motor up to 400 W can be selected.

*The legs are available as option.
See the option page
(the standard color is silver).

SELECT How to select a model

Type90	S2D	300	2,000	T3	C100
Number/ frame thickness (mm)	S: Standard 2: Head drive D: Lower part drive type	Belt width (mm)	Machine length (mm)	Constant speed/T Speed change/F Number/ speed symbol	A (100 VAC, single phase) B (200 VAC, single phase) C (200 VAC, three phase) *Inverter speed change

SIZE Standard specifications

(Unit: mm)

Belt width (actual dimension)	300	400	500	600	700	800
Machine width	400	500	600	700	800	900
Machine length	1,000～8,000					

Machine height | 380
Belt speed | Constant speed
Speed change
Transport capacity | See the transport capacity graph.
Motor output | 100W, 200W, 400W

Power | 100 VAC (single phase)
200 VAC (single phase)
200 VAC (three phase)
Belt (standard) | Polyurethane belt(2-ply) (Green color, compliant with food standards, antistatic treatment done)
Option | Legs, guide, etc.

●When the machine length is 6 m or above, an intermediate take-up unit comes with the conveyor.

DRAWING

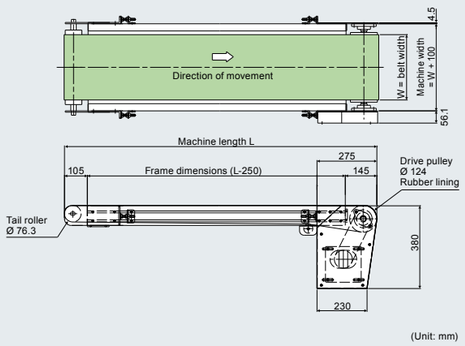

DATA

Belt speed table

Reduction ratio	Speed symbol	Constant speed (m/min) 50/60(Hz)	Speed symbol	Speed change (m/min) 50・60(Hz)
1/450	T1	1.1/1.3	F1	0.4～1.3
1/375	T2	1.3/1.6	F2	0.5～1.6
1/300	T3	1.7/2.0	F3	0.7～2.0
1/200	T4	2.5/3.0	F4	1.0～3.0
1/160	T5	3.1/3.8	F5	1.3～3.8
1/120	T6	4.2/5.0	F6	1.7～5.0
1/100	T7	5.0/6.0	F7	2.0～6.0
1/80	T8	6.3/7.5	F8	2.5～7.5
1/60	T9	8.4/10.0	F9	3.4～10.0
1/50	T10	10.0/12.1	F10	4.0～12.1
1/40	T11	12.6/15.1	F11	5.0～15.1
1/30	T12	16.7/20.1	F12	6.7～20.1
1/25	T13	20.1/24.1	F13	8.0～24.1
1/20	T14	25.1/30.1	F14	10.0～30.1

■ The belt speed is calculated by the motor speed of 1,500/1,800 rpm (50/60 Hz), drive pulley diameter of Φ 124, and drive efficiency of 95%.
■ The speed change type is recommended when the speed needs to be selected accurately.

Motor selection chart

(mm)

Motor output	Reduction ratio
100W	1/15～1/450
200W	1/15～1/200
400W	1/15～1/100

*Setting besides the above is not available.

Transport capacity graph (constant speed)

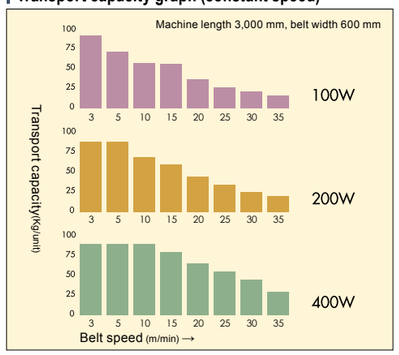

■ The graph shows the capacity when the loads are dispersed horizontally.
Carry items at the setting of 40% or below.
■ The transport capacity fluctuates depending on various factors.

TYPE 60-ZD2 Slope belt cleat model

60-frame

Aluminum frame | **Head drive** | **Light weight model**

The slope belt cleat model that allows
inclined conveyance
(with a cleat height of 30 H and a cleat
pitch of about 300 P).
It supports an inclination angle of up to 45°.

*The cover hopper is available as option.

Standard belt (enlarged view)

SELECT How to select a model

Type60	ZD2	300	3,700	T1	C200	2,500
Number/ frame thickness (mm)	ZD2: For steep slope	Belt width (mm)	Horizontal machine length (mm) *Horizontal machine length: 2,000 to 5,000 (mm)	Constant speed/T Speed change/F Number/ speed symbol	A (100 VAC, single phase) B (200 VAC, single phase) C (200 VAC, three phase) Constant speed = C only Speed change = A, B, C	Lifting height

SIZE Standard specifications

(Unit: mm)

Belt width	300	400	500	600
Effective belt width	200	300	400	500
Machine width	380	480	580	680
Lifting height	2,500			

Machine height | 300H (h1)
Belt speed | Constant speed
Speed change
Transport capacity | See the transport capacity table.
Motor output | 200W

Power | Constant speed
200 VAC (three phase)
Speed change
100 VAC (single phase)
200 VAC (single phase)
200 VAC (three phase)
Belt (standard) | Polyurethane belt with cleat for preventing meander (color: green)
Option | Legs

DATA

Conveyor speed table

Reduction ratio	Speed symbol	Constant speed (m/min) 50/60(Hz)	Speed symbol	Speed change (m/min) 50・60(Hz)
1/75	T1	5.3/6.4	F1	2.1～6.4
1/50	T2	8.1/9.6	F2	3.2～9.6
1/30	T3	13.4/16.1	F3	5.3～16.1
1/18	T4	22.3/26.8	F4	8.9～26.8

Transport capacity table

Lifting height (mm)	Inclination angle	Motor output	Speed symbol	Transport capacity (kg)
460～3,800	30°	200W	1	30
			2	25
	45°		3	20
			4	12

*Powder and pellet items cannot be carried.

DRAWING

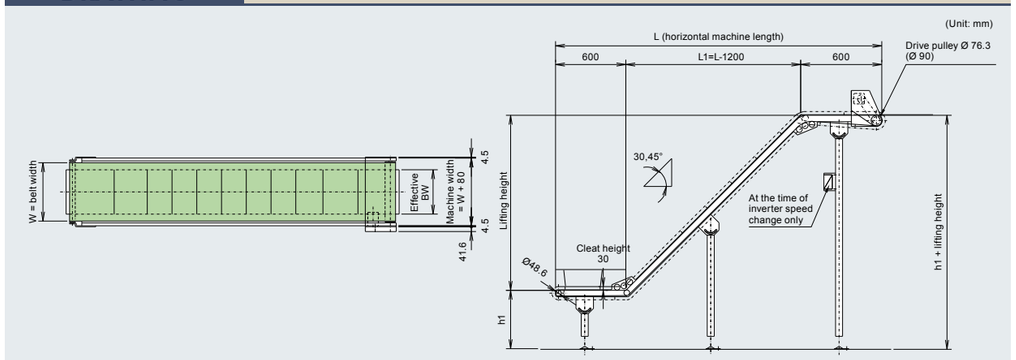

TYPE 120-ZD2S Slope belt cleat model

120-frame

Aluminum frame | Head drive | Medium weight model

The slope belt cleat model that allows inclined conveyance
It supports an inclination angle of up to 60°.

*The cover hopper is available as option.

Standard belt (enlarged view)

SELECT How to select a model

Type120 - ZD2S - 400 - 3,900 - T - C400 - 2,500

- Type120: Number/ frame thickness (mm)
- ZD2S: ZD2: For steep slope S: Corrugated cleat
- 400: Belt width (mm)
- 3,900: Horizontal machine length (mm) *Horizontal machine length: 2,500 to 5,000 (mm)
- T: Constant speed/T Speed change/F Number/ speed symbol
- C400: A (100 VAC, single phase) B (200 VAC, single phase) C (200 VAC, three phase) Constant speed = C only Speed change = A, B, C
- 2,500: Lifting height

SIZE Standard specifications

(Unit: mm)

Belt width	400	500	600
Effective belt width	170	270	370
Machine width	480	580	680
Lifting height	2,500		

Machine height | 300H (h1)
Belt speed | Constant speed
Speed change
Transport capacity | See the transport capacity table.
Motor output | 400W

Power | Constant speed
200 VAC (three phase)
Speed change
100 VAC (single phase)
200 VAC (single phase)
200 VAC (three phase)
Belt (standard) | Polyurethane belt with cleat for preventing meander (color: green)
Option | Legs

DATA

Conveyor speed table

Reduction ratio	Speed symbol	Constant speed (m/min) 50/60(Hz)	Speed symbol	Speed change (m/min) 50・60(Hz)
1/100	T1	4.6/5.5	F1	1.8～5.5
1/60	T2	7.6/9.1	F2	3.1～9.1
1/40	T3	11.4/13.7	F3	4.6～13.7
1/25	T4	18.3/21.9	F4	7.3～21.9

Transport capacity table

Lifting height (mm)	Inclination angle	Motor output	Speed symbol	Transport capacity (kg)
630～6,240	30°	400W	1	48
	45°		2	40
	60°		3	32
			4	20

*Powder and pellet items cannot be carried.

DRAWING

(Unit: mm)

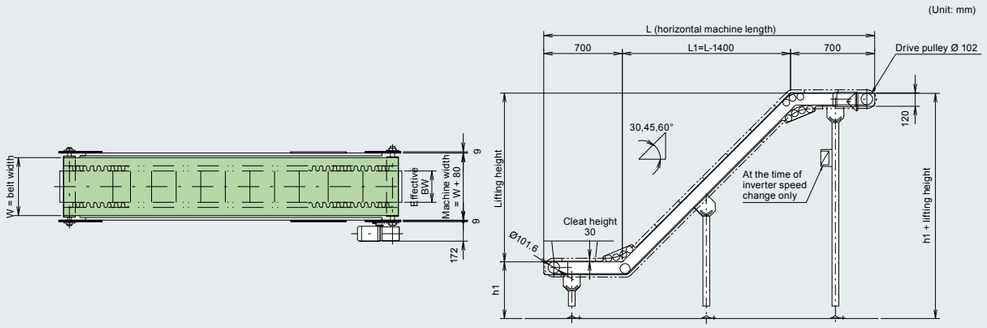

MAKITECH DRIVEN CONVEYOR

Option 1 Belt

Belt types	Standard belt				Slope belt			Super antistatic belt		Slip belt			
No.	1	2	3	4	5	6	7	8	9	10	11	12	13
Color	Green	White	Green	White	Green	Green	Green	Black	Black	Green	White	Green	White
Number of ply	1	1	2	2	1	2	2	1	2	1	1	2	2
Surface material	Polyurethane	Polyurethane	Polyurethane	Polyurethane	Polyurethane	Polyurethane	Vinyl chloride	Polyurethane	Polyurethane	Polyurethane	Polyurethane	Polyurethane	Polyurethane
Belt thickness (mm)	0.8 1.2	0.9	1.3	1.4	1.8	2.3	4.1	0.9	1.45	0.8	0.9	1.2	1.25
Minimum pulley diameter	3R to 8R knife edge	3R to 8R knife edge	25	3R to 8R knife edge	25	40	60	3R to 8R knife edge	25	20	3R to 8R knife edge	20	3R to 8R knife edge
Operating temperature range	-30 ∫ +100	-30 ∫ +100	-30 ∫ +100	-30 ∫ +100	-30 ∫ +100	-30 ∫ +100	-10 ∫ +70	-30 ∫ +100	-30 ∫ +100	-30 ∫ +100	-30 ∫ +100	-30 ∫ +100	-30 ∫ +100
Antistatic treatment	○	○	○	○	○	○	○	◎	◎	○	○	○	○
Suitability for food	○	○	○	○	Raw food conveyance not allowed	Raw food conveyance not allowed	×	Raw food conveyance not allowed	Raw food conveyance not allowed	○	○	○	○
Note	Low noise	Low noise	Resistance to moist heat	Compliant with FDA and BGA	Vertical grooves	Vertical grooves	Rough surface				Compliant with FDA and BGA		Compliant with FDA and BGA
Compatible models	Types 34, 40, 60, and 90.	Types 34, 40, 60, and 90.	Types 34, 60, and 90. KI, KII, RI, RII, VI, and VII are excluded.	Types 60 and 90. KI, KII, RI, RII, VI, and VII are excluded.	Types 34, 40, 60, and 90. KI, KII, RI, RII, VI, and VII are excluded.	Types 60 and 90. KI, KII, RI, RII, VI, and VII are excluded.	Types 90. RI is excluded.	Types 34, 40, 60, and 90. KI, KII, RI, RII, VI, and VII are excluded.	Types 60 and 90. KI, KII, RI, RII, VI, and VII are excluded.	Types 34, 40, 60, and 90. KI, KII, RI, RII, VI, and VII are excluded.	Types 34, 40, 60, and 90. V and VII are excluded.	Types 60 and 90. KI, KII, RI, RII, VI, and VII are excluded.	Types 60 and 90. KI, KII, RI, RII, VI, and VII are excluded.

5.6 Slope belt (vertical grooves)
Able to perform inclined conveyance up to an inclination angle of 25° by the special vertical grooves on the surface.

7 Slope belt (rough top)
For inclined conveyance. Compatible with conveyors with a minimum pulley diameter of Ø 60 or more.

8.9 Super antistatic belt
For carrying charged items such as electronic parts (surface electric resistance value 1 × 10⁹ Ω or below)

10.12 Slip belt
For arranging carried items and sorting piled up items.

14 Drought heat resistant belt
For carrying high-temperature items on a dry line (compliant with Food Sanitation Standards).

15 Moist heat resistant belt
For carrying items with moist and heat such as fish pudding products (compliant with Food Sanitation Standards).

25.26 Cut resistant belt
A belt with a scratch resistant surface (for carrying pressed parts).

27 1-Ply belt (white)
High grip performance.

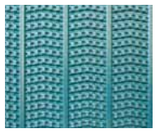

28 1-Ply belt (green)
For inclined conveyance.

29 Belt for skirt
Belt for standard skirt guide.

Drought resistant/ moist heat resistant belt		Oil resistant belt (machine oil)	Oil resistant belt (Food oil)	Antibacterial/antifungal belt			Non-adhesive belt		Suede belt (soft)		Cut resistant belt		Others		
14	15	16	17	18	19	20	21	22	23	24	25	26	27	28	29
Black	Gray	Gray	White	White	White	White	White	White	Green	Green	Ivory		White	Green	Green
1	1	1	1	1	1	2	1	2	1	2	1	1	1	1	1
Elastomer	Polyurethane	Polyurethane	Polyurethane	Polyurethane	Polyurethane	Polyurethane	Silicon	Silicon	Suede	Suede	Vectran	Vectran	Polyurethane	Special rubber	Polyurethane
1.2	0.7	0.7	1.15	0.7	0.8	1.4	1.1	1.5	1.8	2.0	1.2	1.5	1.5	2.0	0.6
25 *1	3R to 8R knife edge	3R to 8R knife edge	3R to 8R knife edge	15	15	20	3R to 8R knife edge	40	25 *2	30	25	40	25	20	25
-10 ~ +120	-30 ~ +100	-30 ~ +100	-30 ~ +100	-30 ~ +80	-20 ~ +80	-20 ~ +80	-30 ~ +100	-40 ~ +180	-5 ~ +60	-5 ~ +60	0 ~ +80	-10 ~ +80	0 ~ +70	-5 ~ +60	-30 ~ +100
◎	×	×	○	○	○	○	○	○	○	○	×	×	○	○	○
Raw food conveyance not allowed	○	○	○	○	○	○	○	○	×	×	×	×	○	×	○
					Low profile canvas with selvage fray prevention		High grip performance		Unlikely to damage quality <soft>		Scratch resistant belt surface		High grip performance	For inclined conveyance	Applied to troughed conveyor and skirt belt
Types 34, 40, and 60. KI, KII, RI, RII, VI, and VII are excluded. *1	Types 34, 40, 60, and 90. VI and VII are excluded.	Types 34, 40, 60, and 90. VI and VII are excluded.	Types 34, 40, 60, and 90. VI and VII are excluded.	Types 34, 40, and 60. KI, KII, RI, RII, VI, and VII are excluded.	Types 60 and 90. KI, KII, RI, RII, VI, and VII are excluded.	Types 60 and 90. KI, KII, VI, and VII are excluded.	Types 34, 40, 60, and 90. VI and VII are excluded.	Types 60 and 90. KI, KII, RI, RII, VI, and VII are excluded.	Types 34, 40, 60, and 90. KI, KII, RI, RII, VI, and VII are excluded. *2	Types 60 and 90. KI, KII, RI, RII, VI, and VII are excluded.	Types 34, 40, 60, and 90. KI, KII, RI, RII, VI, and VII are excluded. *2	Types 60 and 90. KI, KII, RI, RII, VI, and VII are excluded.	Types 34, 40, and 60. KI, KII, RI, RII, VI, and VII are excluded.	Types 34, 40, and 60. KI, KII, RI, RII, VI, and VII are excluded.	Types 34, 40, and 60. RI, RII, VI, and VII are excluded.

16 Oil resistant belt (for machine oil)
For metalworking lines where oil adheres.

17 Oil resistant belt (for cooking oil)
When a small amount of oil adheres to the belt.

18 Antibacterial/ antifungal belt
Belt for food.

19.20 Antibacterial/ antifungal belt
Selvage fray prevention (for food).

21.22 Non-adhesive belt
For carrying adhesive products.

23.24 Suede skirt
Unlikely to damage products.

*1. A lining will be necessary for the drive pulley when No. 14 is used.
*2. When belt 23 or 25 is to be used for type 34, the motor capacity constant speed should be 90 W and the speed change should be 120 W.
*The operating temperature is the heat resistant temperature of the belt and not the operating environment of the conveyor.
*The optional belts may be affected by temperature or chemicals or oils depending on their type. Please check them before use.
*The color of the belt may look different from the catalog because of the way it is printed.
*The above belt specifications may be changed without notice for quality improvement.

MAKITECH DRIVEN CONVEYOR

Option 2 Legs [for types 12, 34, and 40, ModeL34-frame]

[Tip legs]

KAD (aluminum)

Model	Leg height (mm)
KAD	135

Model example

KAD

Tip leg (standard color: silver)
*Two pieces are included in one set.

DRAWING

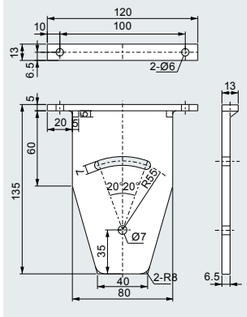

KSD (steel)

Model	Leg height (mm)
KSD	135

Model example

KSD

Tip leg
*Two pieces are included in one set.

DRAWING

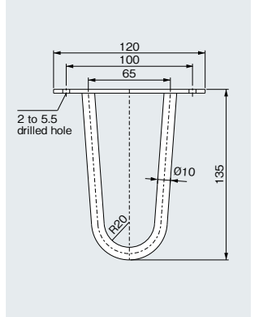

[Standard steel leg]

Applied to models with a belt width of 50 mm to 300 mm.

SELECT

Model	Leg height (mm)
KSX-1	320～420
KSX-2	370～520
KSX-3	470～720
KSX-4	620～1020
KSX-5	770～1,270

■ When ordering legs, please tell us the type and model name of the conveyor.
■ The attachment angle of the legs can be adjusted up to 20° with respect to a horizontal surface.
(Standard color: silver)

Model example

KSX - 2 - 300

Standard leg (steel) / Leg height (370 to 520) / Belt width (mm) / Rubber adjuster leg

DRAWING

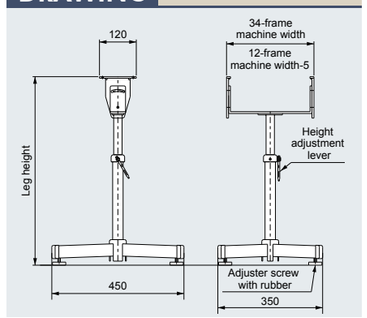

[Steel auxiliary leg]

Applied to models with a belt width of 50 mm to 300 mm.

SELECT

Model	Leg height (mm)
KSI-1	320～420
KSI-2	370～520
KSI-3	470～720
KSI-4	620～1020
KSI-5	770～1,270

■ When ordering legs, please tell us the type and model name of the conveyor.
■ The attachment angle of the legs can be adjusted up to 20° with respect to a horizontal surface.
(Standard color: silver)

Model example

KSI - 2 - 300

Auxiliary leg (steel) / Leg height (370 to 520) / Belt width (mm) / Rubber adjuster leg

DRAWING

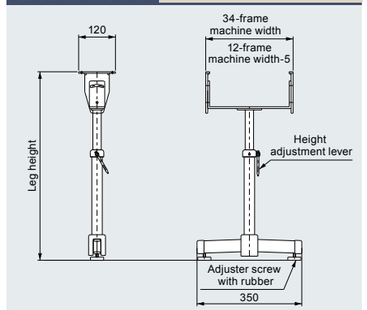

Option 3 Legs [for types 34 and 40, ModeL34-frame]

[Steel fixed leg]

Applied to models with a belt width of 200 mm or above.

SELECT

Model	Leg height (mm)	Model	Leg height (mm)
34CSH4	350～450	34CSH9.5	900～1,000
34CSH4.5	400～500	34CSH10	950～1,050
34CSH5	450～550	34CSH10.5	1,000～1,100
34CSH5.5	500～600	34CSH11	1,050～1,150
34CSH6	550～650	34CSH11.5	1,100～1,200
34CSH6.5	600～700	34CSH12	1,150～1,250
34CSH7	650～750	34CSH12.5	1,200～1,300
34CSH7.5	700～800	34CSH13	1,250～1,350
34CSH8	750～850	34CSH13.5	1,300～1,400
34CSH8.5	800～900	34CSH14	1,350～1,450
34CSH9	850～950	34CSH15	1,450～1,550

■ For a leg height of 500 mm or below, the number of stay will be one.
■ The attachment angle of the legs can be adjusted up to 20° with respect to a horizontal surface.
■ Tell us the presence of the reinforcement pipe.
(Standard color: silver)

Model example

34CSH - 7 - 300

- 34CSH: Fixed leg (stainless) 34CSH 34-frame 40CSH 40-frame
- 7: Leg height (650 to 750)
- 300: Belt width (mm)
- Adjustment bolt with anchor (optional)

DRAWING

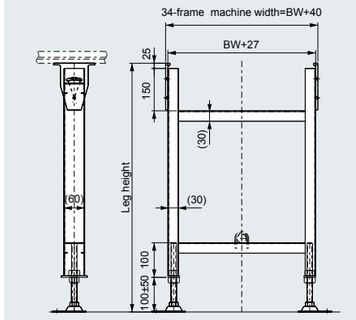

[Steel fixed leg (splayed tapered shape)]

Applied to models with a belt width below 200 mm.

SELECT

Model	Leg height (mm)	Model	Leg height (mm)
CST4	350～450	CST9.5	900～1,000
CST4.5	400～500	CST10	950～1,050
CST5	450～550	CST10.5	1,000～1,100
CST5.5	500～600	CST11	1,050～1,150
CST6	550～650	CST11.5	1,100～1,200
CST6.5	600～700	CST12	1,150～1,250
CST7	650～750	CST12.5	1,200～1,300
CST7.5	700～800	CST13	1,250～1,350
CST8	750～850	CST13.5	1,300～1,400
CST8.5	800～900	CST14	1,350～1,450
CST9	850～950	CST15	1,450～1,550

■ The attachment angle of the legs can be adjusted up to 20° with respect to a horizontal surface.
■ Tell us the presence of the reinforcement pipe.
(Standard color: silver)

Model example

CST - 6 - 150

- CST: Fixed leg (steel)
- 6: Leg height (550 to 650)
- 150: Belt width (mm)
- Adjustment bolt with anchor (optional)

DRAWING

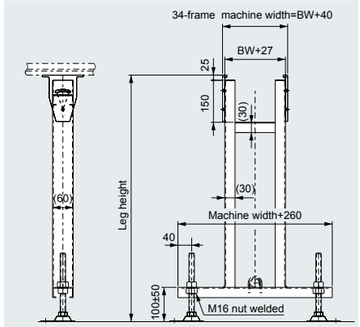

[Aluminum fixed leg]

Applied to models with a belt width of 200 mm or above.

SELECT

Model	Leg height (mm)	Model	Leg height (mm)
KAH3.5	300～400	KAH9	850～950
KAH4	350～450	KAH9.5	900～1,000
KAH4.5	400～500	KAH10	950～1,050
KAH5	450～550	KAH10.5	1,000～1,100
KAH5.5	500～600	KAH11	1,050～1,150
KAH6	550～650	KAH11.5	1,100～1,200
KAH6.5	600～700	KAH12	1,150～1,250
KAH7	650～750	KAH12.5	1,200～1,300
KAH7.5	700～800	KAH13	1,250～1,350
KAH8	750～850	KAH13.5	1,300～1,400
KAH8.5	800～900	KAH14	1,350～1,450

■ For a leg height of 500 mm or below, the number of stay will be one.
■ The attachment angle of the legs can be adjusted up to 20° with respect to a horizontal surface.
■ Tell us the presence of the reinforcement pipe.

Model example

KAH - 4 - 300

- KAH: Fixed leg (aluminum)
- 4: Leg height (350 to 450)
- 300: Belt width (mm)
- Adjustment bolt with anchor (optional)

DRAWING

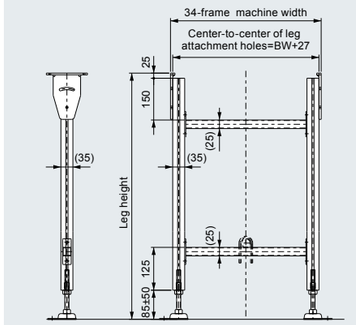

MAKITECH DRIVEN CONVEYOR

Option 4 Legs [for types 34 and 40, ModeL34-frame]

[Aluminum fixed leg (splayed tapered shape)]

Applied to models with a belt width below 200 mm.

SELECT

Model	Leg height (mm)	Model	Leg height (mm)
KAT3.5	320～380	KAT9	870～930
KAT4	370～430	KAT9.5	920～980
KAT4.5	420～480	KAT10	970～1,030
KAT5	470～530	KAT10.5	1,020～1,080
KAT5.5	520～580	KAT11	1,070～1,130
KAT6	570～630	KAT11.5	1,120～1,180
KAT6.5	620～680	KAT12	1,170～1,230
KAT7	670～730	KAT12.5	1,220～1,280
KAT7.5	720～780	KAT13	1,270～1,330
KAT8	770～830	KAT13.5	1,320～1,380
KAT8.5	820～880	KAT14	1,370～1,430

■ For a leg height of 500 mm or below, the number of stay will be one.
■ The attachment angle of the legs can be adjusted up to 20° with respect to a horizontal surface.
■ Tell us the presence of the reinforcement pipe.

Model example

KAT - 4 - 300

- KAT: Fixed leg (aluminum)
- 4: Leg height (350 to 450)
- 300: Belt width (mm)
- Adjustment bolt with anchor (optional)

DRAWING

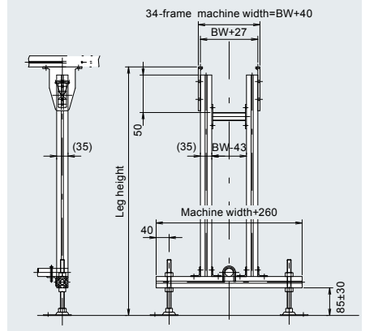

[Stainless steel fixed leg]

Applied to models with a belt width of 200 mm or above.

SELECT

Model	Leg height (mm)	Model	Leg height (mm)
34SUS-CSH4	350～450	34SUS-CSH9.5	900～1,000
34SUS-CSH4.5	400～500	34SUS-CSH10	950～1,050
34SUS-CSH5	450～550	34SUS-CSH10.5	1,000～1,100
34SUS-CSH5.5	500～600	34SUS-CSH11	1,050～1,150
34SUS-CSH6	550～650	34SUS-CSH11.5	1,100～1,200
34SUS-CSH6.5	600～700	34SUS-CSH12	1,150～1,250
34SUS-CSH7	650～750	34SUS-CSH12.5	1,200～1,300
34SUS-CSH7.5	700～800	34SUS-CSH13	1,250～1,350
34SUS-CSH8	750～850	34SUS-CSH13.5	1,300～1,400
34SUS-CSH8.5	800～900	34SUS-CSH14	1,350～1,450
34SUS-CSH9	850～950	34SUS-CSH15	1,450～1,550

■ For a leg height of 500 mm or below, the number of stay will be one.
■ The attachment angle of the legs can be adjusted up to 20° with respect to a horizontal surface.
■ Tell us the presence of the reinforcement pipe.

Model example

34SUS-CSH - 4 - 300

- 34SUS-CSH: Fixed leg (stainless) 34SUS-CSH 34-frame 40SUS-CSH 40-frame
- 4: Leg height (350 to 450)
- 300: Belt width (mm)
- Adjustment bolt with anchor [stainless steel] (optional)

DRAWING

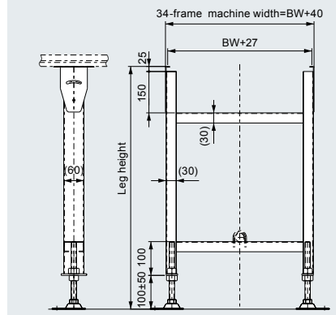

[Upper leg bracket]

For steep slope

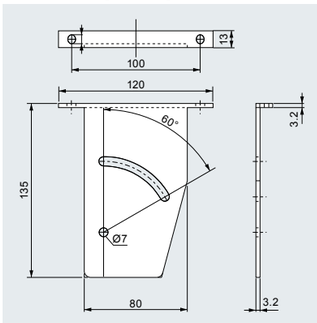

When the attachment angle of the legs is 20° or above with respect to a horizontal surface

For models with cleat (type 34-D2 and type 40-D2)

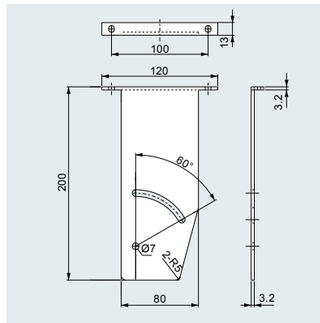

Option 5 Legs [for type 60 frame]

[Steel fixed leg]

Applied to models with a belt width of 200 mm or above.

SELECT

Model	Leg height (mm)	Model	Leg height (mm)
60CSH4	350~450	60CSH9.5	900~1,000
60CSH4.5	400~500	60CSH10	950~1,050
60CSH5	450~550	60CSH10.5	1,000~1,100
60CSH5.5	500~600	60CSH11	1,050~1,150
60CSH6	550~650	60CSH11.5	1,100~1,200
60CSH6.5	600~700	60CSH12	1,150~1,250
60CSH7	650~750	60CSH12.5	1,200~1,300
60CSH7.5	700~800	60CSH13	1,250~1,350
60CSH8	750~850	60CSH13.5	1,300~1,400
60CSH8.5	800~900	60CSH14	1,350~1,450
60CSH9	850~950	60CSH15	1,450~1,550

- For a leg height of 500 mm or below, the number of stay will be one.
- The attachment angle of the legs can be adjusted up to 30° with respect to a horizontal surface.
- Tell us the presence of the reinforcement pipe.
(Standard color: silver)

Model example

60CSH - 8 - 300

Fixed leg (steel) | Leg height (750 to 850) | Belt width (mm) | Adjustment bolt with anchor (optional)

DRAWING

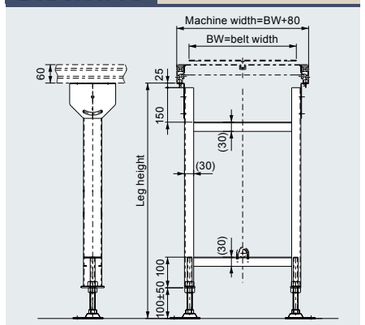

[Aluminum fixed leg]

Applied to models with a belt width of 200 mm or above.

SELECT

Model	Leg height (mm)	Model	Leg height (mm)
CAH4	350~450	CAH9.5	900~1,000
CAH4.5	400~500	CAH10	950~1,050
CAH5	450~550	CAH10.5	1,000~1,100
CAH5.5	500~600	CAH11	1,050~1,150
CAH6	550~650	CAH11.5	1,100~1,200
CAH6.5	600~700	CAH12	1,150~1,250
CAH7	650~750	CAH12.5	1,200~1,300
CAH7.5	700~800	CAH13	1,250~1,350
CAH8	750~850	CAH13.5	1,300~1,400
CAH8.5	800~900	CAH14	1,350~1,450
CAH9	850~950	CAH15	1,450~1,550

- For a leg height of 500 mm or below, the number of stay will be one.
- The attachment angle of the legs can be adjusted up to 30° with respect to a horizontal surface.
- Tell us the presence of the reinforcement pipe.

Model example

CAH - 6 - 400

Fixed leg (aluminum) | Leg height (550 to 650) | Belt width (mm) | Adjustment bolt with anchor (optional)

DRAWING

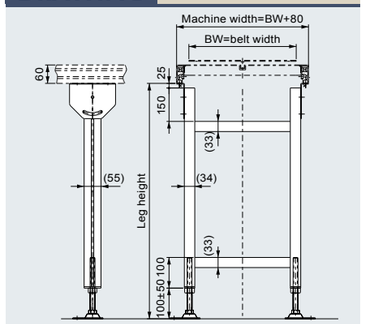

[Stainless steel fixed leg]

Applied to models with a belt width of 200 mm or above.

SELECT

Model	Leg height (mm)	Model	Leg height (mm)
60SUS-CSH4	350~450	60SUS-CSH9.5	900~1,000
60SUS-CSH4.5	400~500	60SUS-CSH10	950~1,050
60SUS-CSH5	450~550	60SUS-CSH10.5	1,000~1,100
60SUS-CSH5.5	500~600	60SUS-CSH11	1,050~1,150
60SUS-CSH6	550~650	60SUS-CSH11.5	1,100~1,200
60SUS-CSH6.5	600~700	60SUS-CSH12	1,150~1,250
60SUS-CSH7	650~750	60SUS-CSH12.5	1,200~1,300
60SUS-CSH7.5	700~800	60SUS-CSH13	1,250~1,350
60SUS-CSH8	750~850	60SUS-CSH13.5	1,300~1,400
60SUS-CSH8.5	800~900	60SUS-CSH14	1,350~1,450
60SUS-CSH9	850~950	60SUS-CSH15	1,450~1,550

- For a leg height of 500 mm or below, the number of stay will be one.
- The attachment angle of the legs can be adjusted up to 30° with respect to a horizontal surface.
- Tell us the presence of the reinforcement pipe.

Model example

60SUS-CSH - 7 - 300

Fixed leg (stainless) | Leg height (650 to 750) | Belt width (mm) | Adjustment bolt with anchor (optional)

DRAWING

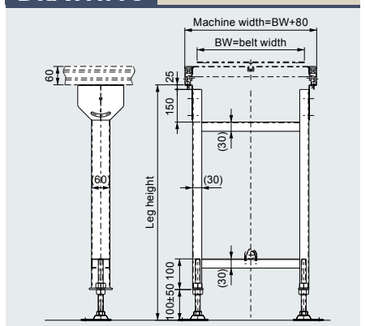

MAKITECH DRIVEN CONVEYOR

Option 6 Legs [for type 90 frame]

[Steel fixed leg]

Applied to models with a belt width of 200 mm or above.

SELECT

Model	Leg height (mm)	Model	Leg height (mm)
JSH4	350~450	JSH9.5	900~1,000
JSH4.5	400~500	JSH10	950~1,050
JSH5	450~550	JSH10.5	1,000~1,100
JSH5.5	500~600	JSH11	1,050~1,150
JSH6	550~650	JSH11.5	1,100~1,200
JSH6.5	600~700	JSH12	1,150~1,250
JSH7	650~750	JSH12.5	1,200~1,300
JSH7.5	700~800	JSH13	1,250~1,350
JSH8	750~850	JSH13.5	1,300~1,400
JSH8.5	800~900	JSH14	1,350~1,450
JSH9	850~950	JSH15	1,450~1,550

- For a leg height of 500 mm or below, the number of stay will be one.
- The attachment angle of the legs can be adjusted up to 30° with respect to a horizontal surface.
- Tell us the presence of the reinforcement pipe.
(Standard color: silver)

Model example

JSH - 5 - 500

Fixed leg (steel) | Leg height | Belt width (mm) | Adjustment bolt with anchor (optional)

DRAWING

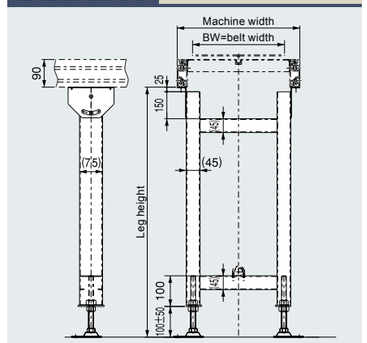

[Aluminum fixed leg]

Applied to models with a belt width of 200 mm or above.

SELECT

Model	Leg height (mm)	Model	Leg height (mm)
JAH4	350~450	JAH9.5	900~1,000
JAH4.5	400~500	JAH10	950~1,050
JAH5	450~550	JAH10.5	1,000~1,100
JAH5.5	500~600	JAH11	1,050~1,150
JAH6	550~650	JAH11.5	1,100~1,200
JAH6.5	600~700	JAH12	1,150~1,250
JAH7	650~750	JAH12.5	1,200~1,300
JAH7.5	700~800	JAH13	1,250~1,350
JAH8	750~850	JAH13.5	1,300~1,400
JAH8.5	800~900	JAH14	1,350~1,450
JAH9	850~950	JAH15	1,450~1,550

- For a leg height of 500 mm or below, the number of stay will be one.
- The attachment angle of the legs can be adjusted up to 30° with respect to a horizontal surface.
- Tell us the presence of the reinforcement pipe.

Model example

JAH - 6 - 600

Fixed leg (aluminum) | Leg height | Belt width (mm) | Adjustment bolt with anchor (optional)

DRAWING

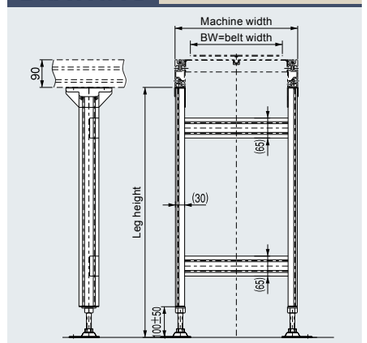

[Stainless steel fixed leg]

Applied to models with a belt width of 200 mm or above.

SELECT

Model	Leg height (mm)	Model	Leg height (mm)
SUS-JSH4	350~450	SUS-JSH9.5	900~1,000
SUS-JSH4.5	400~500	SUS-JSH10	950~1,050
SUS-JSH5	450~550	SUS-JSH10.5	1,000~1,100
SUS-JSH5.5	500~600	SUS-JSH11	1,050~1,150
SUS-JSH6	550~650	SUS-JSH11.5	1,100~1,200
SUS-JSH6.5	600~700	SUS-JSH12	1,150~1,250
SUS-JSH7	650~750	SUS-JSH12.5	1,200~1,300
SUS-JSH7.5	700~800	SUS-JSH13	1,250~1,350
SUS-JSH8	750~850	SUS-JSH13.5	1,300~1,400
SUS-JSH8.5	800~900	SUS-JSH14	1,350~1,450
SUS-JSH9	850~950	SUS-JSH15	1,450~1,550

- For a leg height of 500 mm or below, the number of stay will be one.
- The attachment angle of the legs can be adjusted up to 30° with respect to a horizontal surface.
- Tell us the presence of the reinforcement pipe.

Model example

SUS-JSH - 7 - 400

Fixed leg (stainless) | Leg height | Belt width (mm) | Adjustment bolt with anchor (optional)

DRAWING

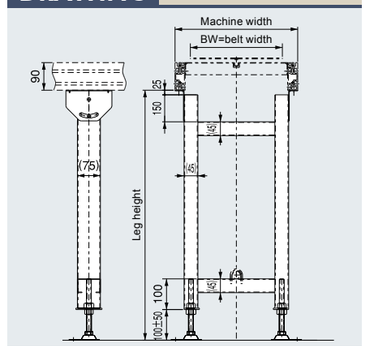

Option 7 Legs [for types 34, 40, and 60, ModeL34-frame]

[High legs for high machine height]
(1,501 to 2,500 H, steel)

(Standard color: silver)

SELECT

Model	Leg height (mm)
HSH15.5	1,500~1,600
HSH16	1,550~1,650
HSH17	1,650~1,750
HSH18	1,750~1,850
HSH19	1,850~1,950
HSH20	1,950~2,050
HSH21	2,050~2,150
HSH22	2,150~2,250
HSH23	2,250~2,350
HSH24	2,350~2,450
HSH24.5	2,400~2,500

Model example

HSH - 18 - 500 - A

- HSH: Fixed leg (steel)
- 18: Leg height (1,701 to 1,800)
- 500: Belt width (mm)
- A: Hakama

DRAWING

●For 200 to 400 BW ●For 500 to 600 BW

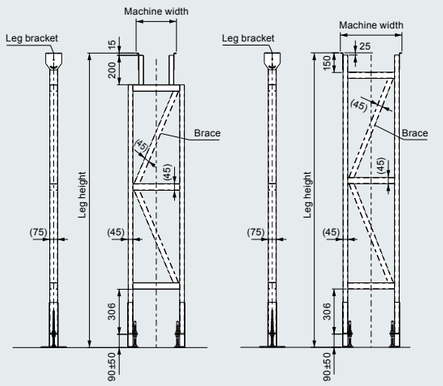

*A brace comes with the leg for a height of 2,001 mm or above.

[Number of legs by machine length]

Standard leg (KSK) / Auxiliary leg (KSI)

Machine length (m)	1.0~2.4	2.5~3.0	3.1~4.0	4.1~5.4	5.5~8.0	(8.1~9.0)	(9.1~12.0)
Standard leg	1	2	2	2	3	3	4
Auxiliary leg	1	1	1	2	2	3	3

Fixed leg

Machine length (m)	1.0~2.4	2.5~3.0	3.1~4.0	4.1~5.4	5.5~8.0	(8.1~9.0)	(9.1~12.0)
Fixed leg	2	3	3	4	5	6	7

[Adjustment bolt]

DRAWING

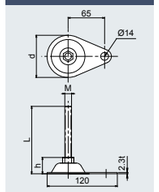

SELECT

Adjustment bolt with anchor plate (Unit: mm)

M	h	d	L
M12	25	75	175
M16	27	75	207

MAKITECH DRIVEN CONVEYOR

Option 8 Guide

A guide can also be selected depending on the carried items, conveyance, and conditions.

How to select a model

3G — T — L

3G: Guide for 34-frame	T: Steel	L: Fixed type
6G: Guide for 60-frame	A: Aluminum	O: Pipe, round bar type
9G: Guide for 90-frame	J: Resin	F: Flat type
	S: Stainless steel	S: Skirt type

Guide for 34-frame

3G-TL model (Steel) /fixed type

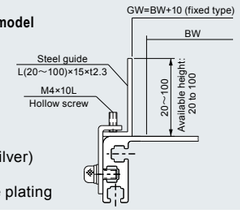

Type A
Painting (silver)
Type B
Unichrome plating

3G-AL model (Aluminum) /fixed type

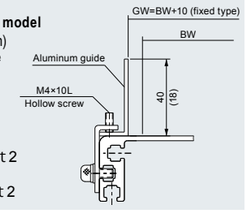

Type A
L40×15× t 2
Type B
L18×15× t 2

3G-SL model (Stainless steel) /fixed type

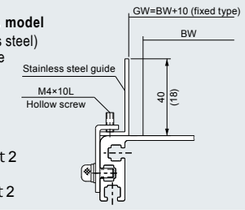

Type A
L40×15× t 2
Type B
L18×15× t 2

3G-SO-1 model (Stainless steel) /width adjustment type

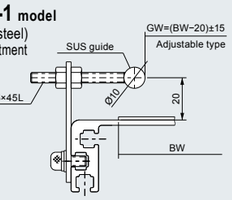

3G-SO-2 model (Stainless steel) /height and width adjustment type

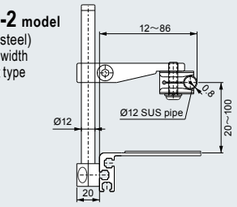

3G-SO-3 model (Stainless steel) /fixed type

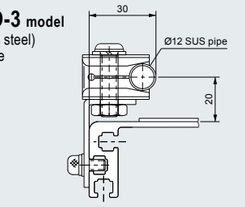

3G-SF model (Stainless steel) /width adjustment type

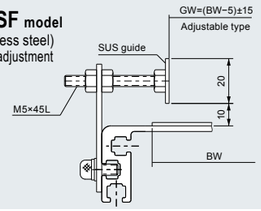

3G-JO-1 model (Resin type) /width adjustment type

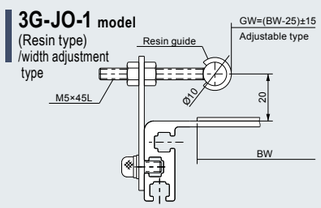

3G-AF model (Aluminum) /height and width adjustment type

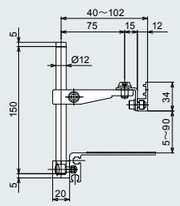

3G-AF-1 model (Aluminum) /height and width adjustment type

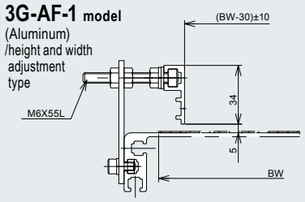

3G-JF-1 model (Resin type) /width adjustment type

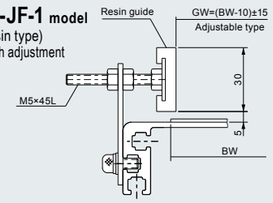

3G-JU model (Guide with resin skirt) /fixed type

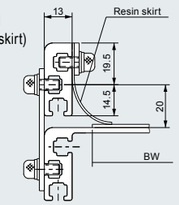

Guide for 40-frame

4G-AF-1 model

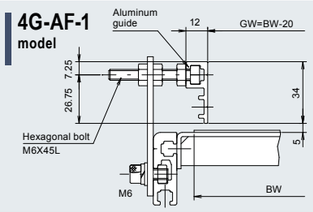

4G-AF-2 model

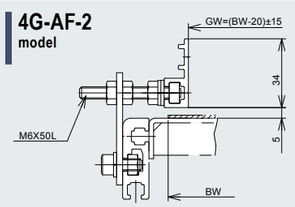

4G-JU model

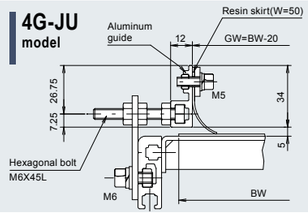

Option 9 Guide

A guide can also be selected depending on the carried items, conveyance, and conditions.

Guide for 60-frame

6G-TL model
(Steel)
/fixed type

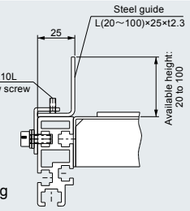

Type A
Painting (silver)
Type B
Unichrome plating

6G-AL model
(Aluminum)
/fixed type

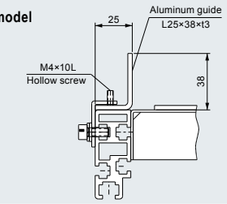

6G-SL model
(Stainless steel)
/fixed type

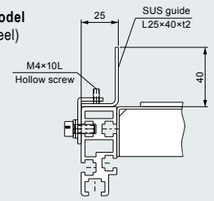

6G-SO-1 model
(Stainless steel)
/width adjustment type

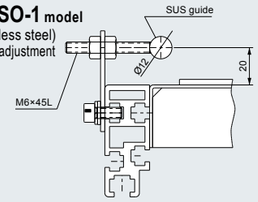

6G-SO-2 model
(Stainless steel)
/height and width adjustment type

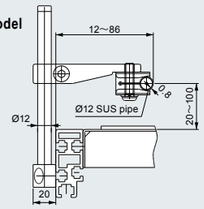

6G-SO-3 model
(Stainless steel)
/height and width adjustment type

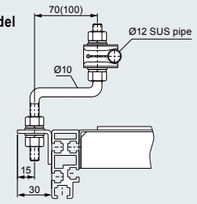

6G-SF model
(Stainless steel)
/width adjustment type

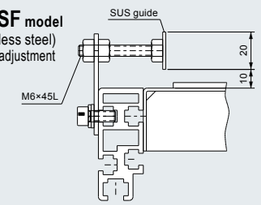

6G-JO-1 model
(Resin type)
/width adjustment type

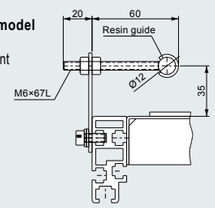

6G-AF model
(Aluminum)
/height and width adjustment type

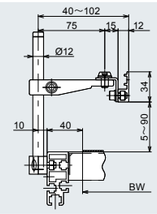

6G-AF-1 model
(Aluminum)
/height and width adjustment type

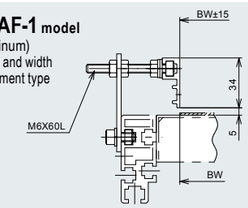

6G-JF-1 model
(Resin type)
/width adjustment type

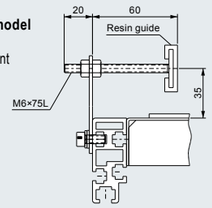

6G-JU model
(Guide with resin skirt)
/height adjustment type

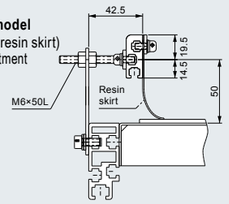

6G-SO model
(Ø25 pipe)
/height and width adjustment type

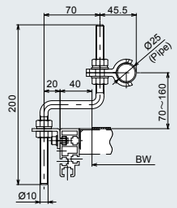

Guide for 90-frame

9G-TL-1 model
(Steel)
/fixed type

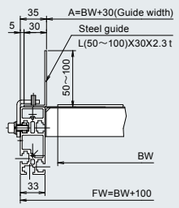

Type A
Painting (silver)
Type B
Unichrome plating

9G-TL-2 model
(Steel)
/fixed type

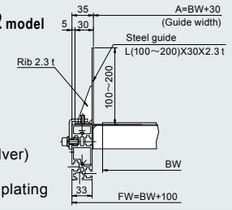

Type A
Painting (silver)
Type B
Unichrome plating

9G-SL model
(Stainless steel)
/fixed type

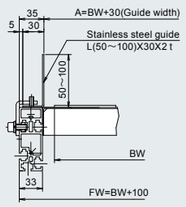

9G-JF-1 model
(Resin)
/fixed type

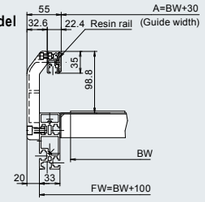

9G-JF-2 model
(Resin type)
/width adjustment type

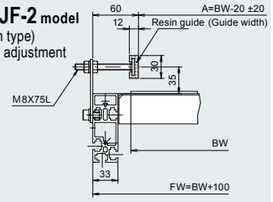

9G-SO model
(Ø25 pipe)
/height and width adjustment type

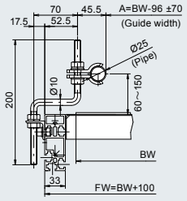

MAKITECH
DRIVEN CONVEYOR

Option 10 Optional parts

Side belt type guide conveyor [side guide scraper belt conveyor M II] (for food industry)

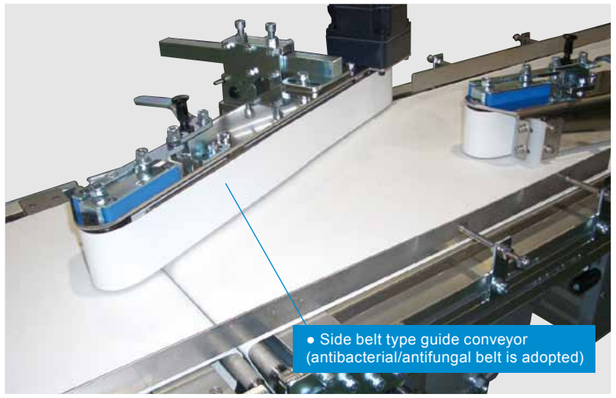

[Applications]

- Aligns works in other rows into one row by speeding up the belt.
- Utilized as a branching device.
- Utilized as a perpendicular direction changing machine.
- Able to pass works by the flip-up function.
- Equipped with belt loosening device.

[Flip-up mechanism]

For multi-row conveyance, the flip-up mechanism can be used to effectively utilize the conveyor belt. The side belt can also be attached and detached easily.

■ Specifications

(Unit: mm)

Compatible models	Type60、Type90 / AR60
Machine length	500mm～700mm
Belt width	50 mm (antibacterial/antifungal belt)
Speed	50 m/min at max. (speed change)

Usage example 1

Aligns works in multiple rows into one row with the side belt type guides and by speeding up the belt conveyor.

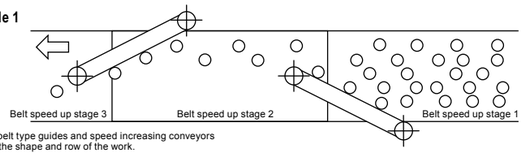

*The number of side belt type guides and speed increasing conveyors differs depending on the shape and row of the work.

Usage example 2

Utilized as a branching device.
The side belt type guides are used to sort one row into two rows.

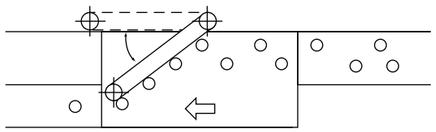

Usage example 3

Utilized as a perpendicular direction changing machine.
●The side belt type guide is used to change the direction by 90° in a small space.

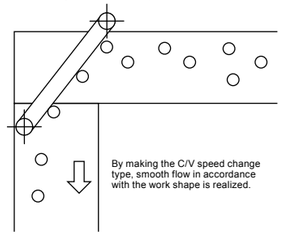

[Drawing]

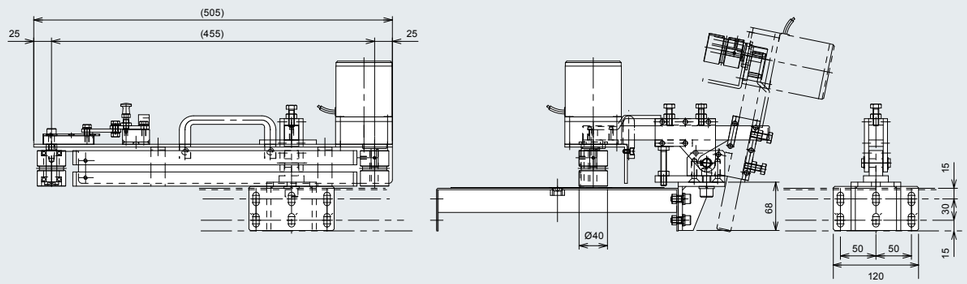

Option 10 Optional parts

Detachable scraper (for food industry)

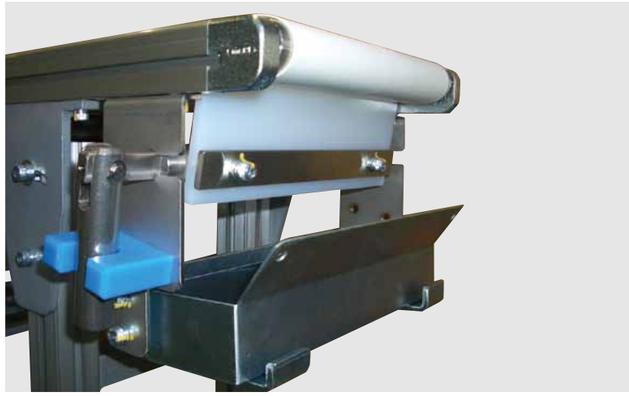

*The above picture shows a detachable scraper attached to a type 34 model.

[Applications]

The scraper is used to remove dirt that adhered on the belt surface.
The edge plate can be removed to wash away any dirt on it with water.
The dirt removed by the edge plate goes into a dirt receiving container, and the floor does not get dirty.

■ Specifications

Compatible models	ModeL34, types 34, 60, 90, and AR (materials and structure may differ partly)
Belt width	100 W to 600 W (700 W to 1,000 W are substandard)

- The edge plate (resin) attachment part uses SUS.
- Parts of the dirt receiving container is made of an SS material and plated.

[Drawing]

Detachable scraper

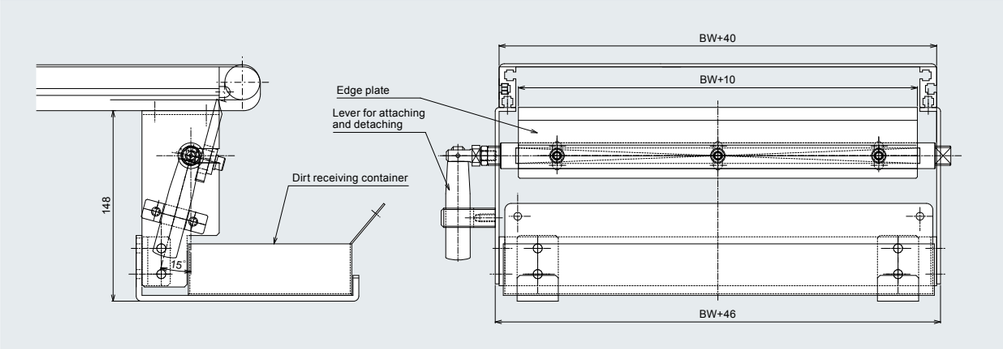

34-scraper

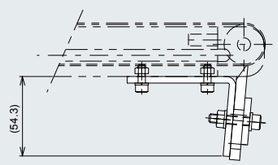

60-scraper

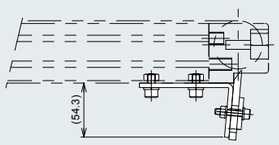

Detachable scraper

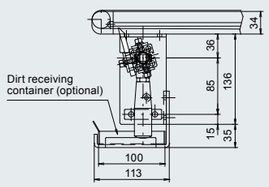

*The attachment part is made of an SS material and plated.

Scrapers are optional parts for removing dirt on the belt. A brush type can also be made.

MAKITECH DRIVEN CONVEYOR

Option 10 Optional parts

34-frame hopper

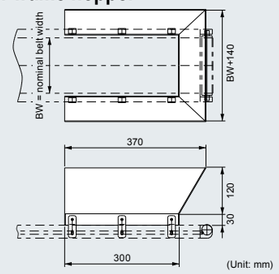

34-frame chute

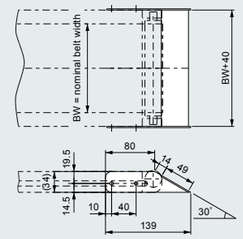

34-frame connecting fitting

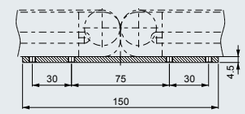

60-frame connecting fitting

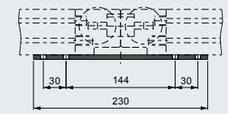

60-frame hopper

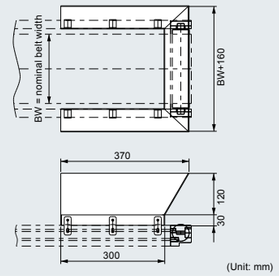

60-frame chute

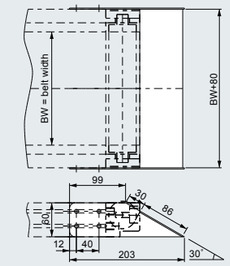

Tool-less guide

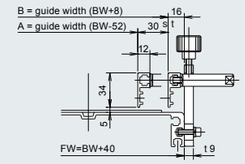

Hopper

Optional part effective for carrying bulk solids.

Tip chute

Optional part for smoothly transferring carried items.

Connecting fitting (fixed type)

Fitting for fixing conveyors.

34-transfer plate

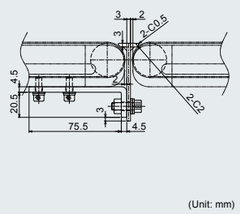

34-transfer roller

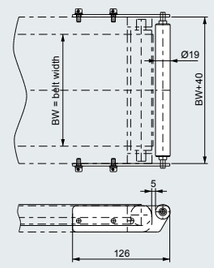

34-stopper (SS material)

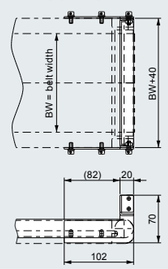

34-turn roller

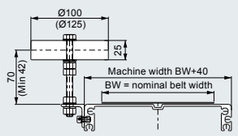

60-transfer plate

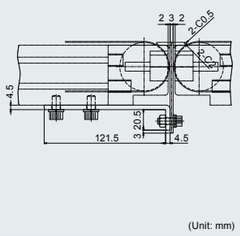

60-transfer roller

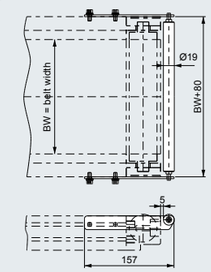

60-stopper (SS material)

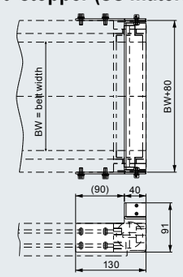

60-turn roller

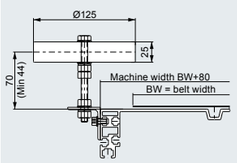

Transfer plate

Optional part for smoothly transferring carried items from a conveyor to a conveyor.
The plate is made of stainless steel.

Transfer roller

Optional part for smoothly transferring carried items from a conveyor to a conveyor.
The roller is made of stainless steel.

Stopper

Optional part for stopping carried items.
Use a slip belt when using a stopper.

Turn roller

Optional part for smoothly making carried items to merge or change direction.

ARAEEL

CONTENTS

Araeel

•Standard type •Meander-less type	AR40-S1 AR40-G1	P081
•Detachable belt type	AR40-U1	P082
•Standard type •Meander-less type	AR40-S2 AR40-G2	P083
•Standard type •Meander-less type	AR60-S1 AR60-G1	P084
•Detachable belt type	AR60-U1	P085
•Plastic belt type	AR12-P AR12-PC	P086～087
•Resin top chain type •Resin top chain curved type	AR12-TD AR12-TC	P088
•Drive roller type •Accumulation roller type •Drive roller curved type	AR12-KD AR12-MA AR12-RC	P089～090
•Belt •Guide •Legs	Option	P091～098

AR40-S1 Standard type
AR40-G1 Meander-less type

Stainless steel | Center drive | Light weight model | Inverter speed change | IP65 | Antibacterial/antifungal belt

All stainless steel belt conveyor optimum for carrying food.

*The legs are available as option.

•AR40-S1

Rough standard transport capacity

30kg/ total length — Total length: 3 m, 300BW, When dry

•AR40-G1

Rough standard transport capacity

25kg/ total length — Total length: 3 m, 300BW, When dry

Belt loosening device.
With this optional part, a user can easily clean the back of the belt.

AR40-G1 Meander-less type

■How to look at a model

AR401 - S1 - 300 - 1,500 - H6 - C90

- AR401: AR401: 40H frame 2B material; AR402: 40H frame #400 abrasive
- S1: Standard type; S1: Center drive
- G1: Meander-less type; G1: Center drive
- 300: Belt width (mm)
- 1,500: Machine length (mm)
- H6: T/ Constant speed; H/ Speed change; Number/ Speed symbol
- C90: A/ Single-phase 100 V; B/ Single-phase 200 V; C/ Three-phase 200 V; Number/ Motor output

■Conveyor speed table (Unit: m/min)

Constant speed		Speed change	
Symbol	50/60Hz	Symbol	20～60Hz
T1	2.7/3.2	H1	1.1～3.2
T2	3.4/4.0	H2	1.3～4.0
T3	4.0/4.8	H3	1.6～4.8
T4	5.4/6.4	H4	2.1～6.4
T5	6.7/8.1	H5	2.7～8.1
T6	8.1/9.7	H6	3.2～9.7
T7	11.2/13.4	H7	4.5～13.4
T8	13.4/16.1	H8	5.4～16.1
T9	16.1/19.3	H9	6.4～19.3
T10	22.4/26.9	H10	9.0～26.9
T11	26.9/32.2	H11	10.7～32.2
T12	32.2/38.7	H12	12.9～38.7

- Motor speed: 1,500 rpm/1,800 rpm (50 Hz/60 Hz)
- Drive efficiency: 95%
- Drive pulley diameter: Ø 90

Note: The above table shows the speed under the condition of no load.

■Specifications (Unit: mm)

Model	AR40-S1・AR40-G1							
Belt width (BW)	100	150	200	250	300	400	500	600
Machine width (FW)	140	190	240	290	340	440	540	640
Machine length (L)	1,000～9,000							
Machine height (H)	min500							
Frame	SUS304 40H (401: 2B material 402: #400 abrasive)							
Belt	Resin food belt (antibacterial/antifungal)							
Transport capacity	AR40-S1…30 (kg/unit) AR40-G1…25 (kg/unit)							
Motor output	90W・100W・200W							
Power	100 VAC (single phase) / 200 VAC (single phase) / 200 VAC (three phase)							
Optional parts	Guide, legs, belt loosening device, ON/OFF switch							

■Drawing

AR40-S1

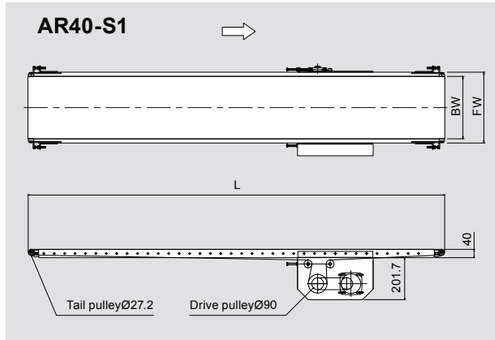

AR40-G1

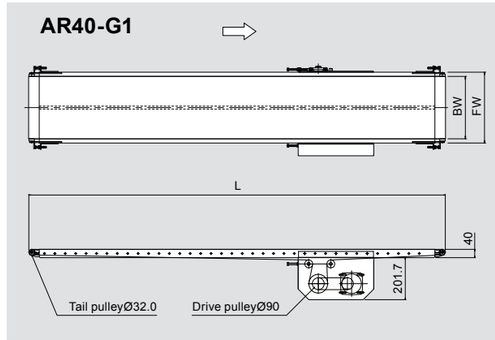

*A 2-m power cable comes with the conveyor. The single-phase 100 V power is attached with a plug. The single-phase 200 V power and the three-phase 200 V power are delivered by a terminal box.
*The speed change type is recommended when the speed needs to be selected accurately.

AR40-U1 Detachable belt type

Stainless steel | Center drive | Light weight model | Inverter speed change
IP65 | Antibacterial/antifungal belt | Meander-less

Optimum for lines that frequently clean the belt.
The belt can be attached and detached without a tool and can be cleaned easily.
The standard type is equipped with a belt loosening device on one side.

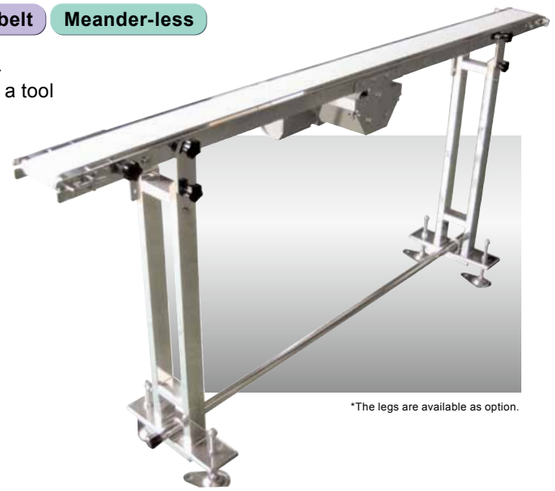

*The legs are available as option.

Rough standard transport capacity
25kg/ total length — Total length: 3 m, 300BW, When dry

■How to look at a model

AR401	-	U1	-	300	-	1,500	-	H6	-	C100
AR401: 40H frame 2B material AR402: 40H frame #400 abrasive		Detachable belt type U1: Center drive		Belt width (mm)		Machine length (mm)		T/ Constant speed H/ Speed change Number/ Speed symbol		A/ Single-phase 100 V B/ Single-phase 200 V C/ Three-phase 200 V Number/ Motor output

■Specifications

(Unit: mm)

Model	AR40-U1						
Belt width (BW)	100	150	200	250	300	400	500
Machine width (FW)	140	190	240	290	340	440	540
Machine length (L)	1,000～3,000						
Machine height (H)	min500						
Frame	SUS304 40H (401: 2B material 402: #400 abrasive)						
Belt	Resin food belt (antibacterial/antifungal)						
Transport capacity	25 (kg/unit)						
Motor output	100W						
Power	100 VAC (single phase) / 200 VAC (single phase) / 200 VAC (three phase)						
Optional parts	Guide, detachable legs, ON/OFF switch						

Belt loosening device.

Limited to meander-less type

Detachable legs (optional)

■Drawing

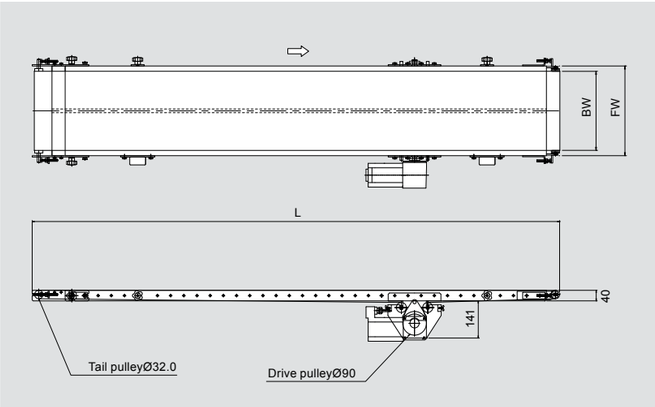

*A 2-m power cable comes with the conveyor. The single-phase 100 V power is attached with a plug.
The single-phase 200 V power and the three-phase 200 V power are delivered by a terminal box.
*The speed change type is recommended when the speed needs to be selected accurately.

■Conveyor speed table

(Unit: m/min)

Constant speed		Speed change	
Symbol	50/60Hz	Symbol	20～60Hz
T1	2.7/3.2	H1	1.1～3.2
T2	3.4/4.0	H2	1.3～4.0
T3	4.0/4.8	H3	1.6～4.8
T4	5.4/6.4	H4	2.1～6.4
T5	6.7/8.1	H5	2.7～8.1
T6	8.1/9.7	H6	3.2～9.7
T7	11.2/13.4	H7	4.5～13.4
T8	13.4/16.1	H8	5.4～16.1
T9	16.1/19.3	H9	6.4～19.3
T10	22.4/26.9	H10	9.0～26.9
T11	26.9/32.2	H11	10.7～32.2
T12	32.2/38.7	H12	12.9～38.7

● Motor speed: 1,500 rpm/1,800 rpm (50 Hz/60 Hz)
● Drive efficiency: 95%
● Drive pulley diameter: Ø 90
Note: The above table shows the speed under the condition of no load.

AR40-S2 Standard type
AR40-G2 Meander-less type

Stainless steel | Head drive | Light weight model | Inverter speed change
IP65 | Antibacterial/antifungal belt

All stainless steel belt conveyor optimum for carrying food.

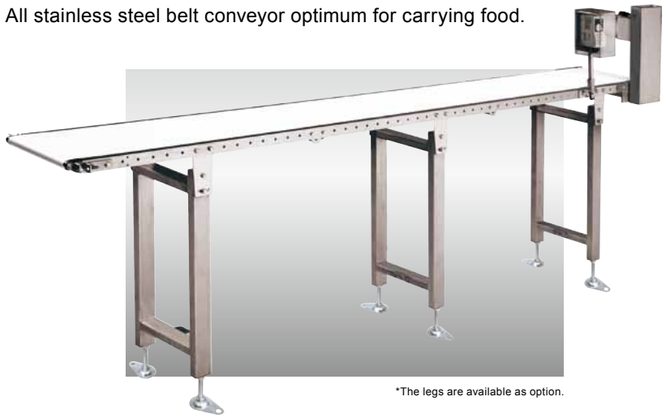

*The legs are available as option.

●AR40-S2
Rough standard transport capacity
20kg/ total length — Total length: 3 m, 300BW, When dry

●AR40-G2
Rough standard transport capacity
15kg/ total length — Total length: 3 m, 300BW, When dry

Belt loosening device.
With this optional part, a user can easily clean the back of the belt.

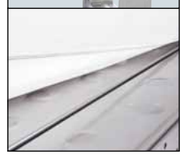

AR40-G2 Meander-less type

■How to look at a model

AR401	-	S2U	-	300	-	1,500	-	H6	-	C90
AR401: 40H frame 2B material AR402: 40H frame #400 abrasive		Standard type S2U: head drive placed on top S2D: head drive placed on bottom S2H: hollow shaft		Belt width (mm)		Machine length (mm)		T/ Constant speed H/ Speed change Number/ Speed symbol		A/ Single-phase 100 V B/ Single-phase 200 V C/ Three-phase 200 V Number/ Motor output

G2U
Meander-less type G2U: head drive placed on top G2D: head drive placed on bottom G2H: hollow shaft

■Specifications

(Unit: mm)

Model	AR40-S2・AR40-G2							
Belt width (BW)	100	150	200	250	300	400	500	600
Machine width (FW)	140	190	240	290	340	440	540	640
Machine length (L)	1,000～9,000							
Machine height (H)	min500							
Frame	SUS304 40H (401: 2B material 402: #400 abrasive)							
Belt	Resin food belt (antibacterial/antifungal)							
Transport capacity	AR40-S2…20 (kg/unit) AR40-G2…15 (kg/unit)							
Motor output	90W･100W･200W							
Power	100 VAC (single phase) / 200 VAC (single phase) / 200 VAC (three phase)							
Optional parts	Guide, legs, belt loosening device, ON/OFF switch							

■Conveyor speed table

(Unit: m/min)

Constant speed		Speed change	
Symbol	50/60Hz	Symbol	20～60Hz
T1	2.3/2.7	H1	0.9～2.7
T2	2.8/3.4	H2	1.1～3.4
T3	3.4/4.1	H3	1.4～4.1
T4	4.6/5.5	H4	1.8～5.5
T5	5.7/6.8	H5	2.3～6.8
T6	6.8/8.2	H6	2.7～8.2
T7	9.5/11.4	H7	3.8～11.4
T8	11.4/13.7	H8	4.6～13.7
T9	13.7/16.4	H9	5.5～16.4
T10	19.0/22.8	H10	7.6～22.8
T11	22.8/27.3	H11	9.1～27.3
T12	27.3/32.8	H12	10.9～32.8

● Motor speed: 1,500 rpm/1,800 rpm (50 Hz/60 Hz)
● Drive efficiency: 95%
● Drive pulley Ø 76
Note: The above table shows the speed under the condition of no load.

■Drawing

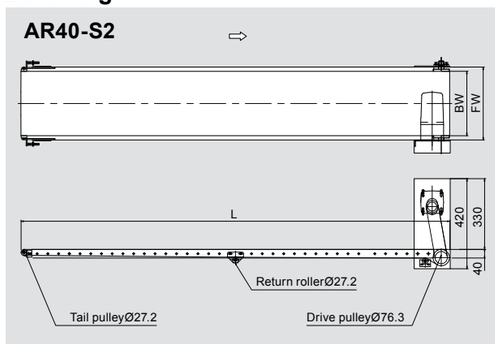

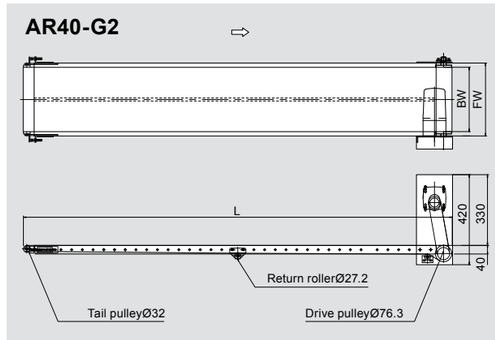

*A 2-m power cable comes with the conveyor. The single-phase 100 V power is attached with a plug. The single-phase 200 V power and the three-phase 200 V power are delivered by a terminal box.
*The speed change type is recommended when the speed needs to be selected accurately.

AR60-S1 Standard type
AR60-G1 Meander-less type

Stainless steel | Center drive | Medium weight model | Inverter speed change
IP65 | Antibacterial/antifungal belt

The frame strength is enhanced, and the conveyor is suitable for carrying heavy things.

*The legs are available as option.

●AR60-S1
Rough standard transport capacity
50kg/ total length — Total length: 3 m, 300BW, When dry

●AR60-G1
Rough standard transport capacity
40kg/ total length — Total length: 3 m, 300BW, When dry

Belt loosening device.
With this optional part, a user can easily clean the back of the belt.

AR60-G1 Meander-less type

■How to look at a model

AR601	-	S1	-	300	-	1,500	-	H6	-	C200
AR601: 60H frame 2B material AR602: 60H frame #400 abrasive		Standard type S1: Center drive G1 Meander-less type G1: Center drive		Belt width (mm)		Machine length (mm)		T/ Constant speed H/ Speed change Number/ Speed symbol		A/ Single-phase 100 V B/ Single-phase 200 V C/ Three-phase 200 V Number/ Motor output

■Specifications

(Unit: mm)

Model	AR60-S1・AR60-G1							
Belt width (BW)	300	400	500	600	700	800	900	1000
Machine width (FW)	340	440	640	640	740	840	940	1040
Machine length (L)	1,000～9,000							
Machine height (H)	min500							
Frame	SUS304 60H (601: 2B material 602: #400 abrasive)							
Belt	Resin food belt (antibacterial/antifungal)							
Transport capacity	AR60-S1…50 (kg/unit) AR60-G1…40 (kg/unit)							
Motor output	200W・400W							
Power	100 VAC (single phase) / 200 VAC (single phase) / 200 VAC (three phase)							
Optional parts	Guide, legs, belt loosening device, ON/OFF switch							

■Conveyor speed table

(Unit: m/min)

Constant speed		Speed change	
Symbol	50/60Hz	Symbol	20～60Hz
T1	2.6/3.1	H1	1.0～3.1
T2	3.4/4.1	H2	1.3～3.9
T3	4.3/5.1	H3	1.7～5.1
T4	5.7/6.9	H4	2.3～6.9
T5	6.4/7.7	H5	2.6～7.7
T6	8.6/10.3	H6	3.4～10.3
T7	10.3/12.4	H7	4.1～12.4
T8	12.9/15.4	H8	5.1～15.4
T9	17.2/20.6	H9	6.9～20.6
T10	20.6/24.7	H10	8.2～24.7
T11	25.7/30.9	H11	10.3～30.9
T12	34.3/41.2	H12	13.7～41.2

● Motor speed: 1,500 rpm/1,800 rpm (50 Hz/60 Hz)
● Drive efficiency: 95%
● Drive pulley Ø 115
Note: The above table shows the speed under the condition of no load.

■Drawing

AR60-S1

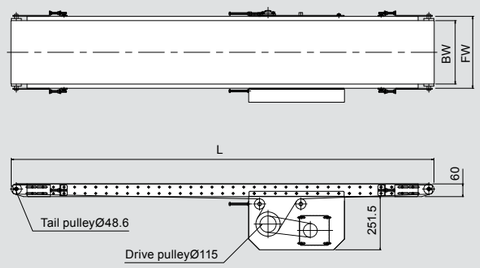

AR60-G1

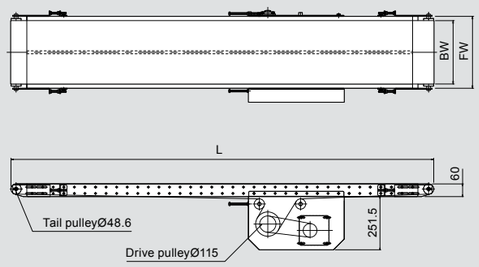

*A 2-m power cable comes with the conveyor. The single-phase 100 V power is attached with a plug. The single-phase 200 V power and the three-phase 200 V power are delivered by a terminal box.
*The speed change type is recommended when the speed needs to be selected accurately.

AR60-U1 Detachable belt type

Stainless steel | Center drive | Medium weight model | Inverter speed change
IP65 | Antibacterial/antifungal belt | Meander-less

Optimum for lines that frequently clean the belt.
The belt can be attached and detached without a tool and can be cleaned easily.
The standard type is equipped with a belt loosening device on one side.

*The legs and the ON/OFF switch are available as option.

Rough standard transport capacity
40kg/ total length — Total length: 3 m, 300BW, When dry

■How to look at a model

AR601	-	U1	-	300	-	1,500	-	H6	-	C200
AR601: 60H frame 2B material AR602: 60H frame #400 abrasive		Detachable belt type U1: Center drive		Belt width (mm)		Machine length (mm)		T/ Constant speed H/ Speed change Number/ Speed symbol		A/ Single-phase 100 V B/ Single-phase 200 V C/ Three-phase 200 V Number/ Motor output

Belt loosening device.

Limited to meander-less type

Detachable legs (optional)

■Specifications

(Unit: mm)

Model	AR60-U1		
Belt width (BW)	300	400	500
Machine width (FW)	340	440	540
Machine length (L)	1,000～3,000		
Machine height (H)	min500		
Frame	SUS304 60H (601: 2B material 602: #400 abrasive)		
Belt	Resin food belt (antibacterial/antifungal)		
Transport capacity	40 (kg/unit)		
Motor output	200W		
Power	100 VAC (single phase) / 200 VAC (single phase) / 200 VAC (three phase)		
Optional parts	Guide, detachable legs, ON/OFF switch		

■Drawing

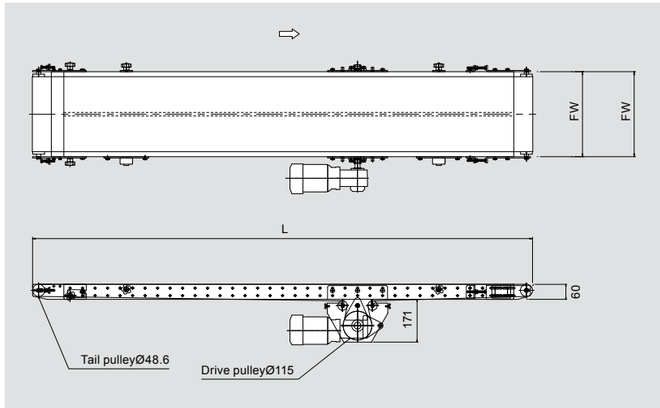

*A 2-m power cable comes with the conveyor. The single-phase 100 V power is attached with a plug. The single-phase 200 V power and the three-phase 200 V power are delivered by a terminal box.
*The speed change type is recommended when the speed needs to be selected accurately.

■Conveyor speed table

(Unit: m/min)

Constant speed		Speed change	
Symbol	50/60Hz	Symbol	20～60Hz
T1	2.6/3.1	H1	1.0～3.1
T2	3.4/4.1	H2	1.3～3.9
T3	4.3/5.1	H3	1.7～5.1
T4	5.7/6.9	H4	2.3～6.9
T5	6.4/7.7	H5	2.6～7.7
T6	8.6/10.3	H6	3.4～10.3
T7	10.3/12.4	H7	4.1～12.4
T8	12.9/15.4	H8	5.1～15.4
T9	17.2/20.6	H9	6.9～20.6
T10	20.6/24.7	H10	8.2～24.7
T11	25.7/30.9	H11	10.3～30.9
T12	34.3/41.2	H12	13.7～41.2

● Motor speed: 1,500 rpm/1,800 rpm (50 Hz/60 Hz)
● Drive efficiency: 95%
● Drive pulley Ø 115
Note: The above table shows the speed under the condition of no load.

AR12-P Plastic belt type

Stainless steel | Center drive/head drive | Light weight model | Inverter speed change | IP65

Because of its excellent water resistance, the whole conveyor can be washed.
The belt does not meander or slip because it is driven by a resin sprocket.
The module belt can be selected depending on the items to be carried.

*The legs are available as option.

Rough standard transport capacity
30kg/ total length
Total length: 3 m
300BW
When dry

■How to look at a model

AR121	-	P1	-	300	-	1,500	-	H6	-	C200
AR121: 120H frame 2B material AR122: 120H frame #400 abrasive		Plastic belt type P1: Center drive P2U: head drive placed on top P2D: head drive placed on bottom P2H: hollow shaft		Belt width (mm)		Machine length (mm)		T/ Constant speed H/ Speed change Number/ Speed symbol		A/ Single-phase 100 V B/ Single-phase 200 V C/ Three-phase 200 V Number/ Motor output

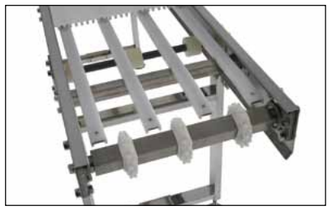

The frame has no redundant holes any more.
The conveyor is kept clean because of its stain-resistant structure.

■Specifications

(Unit: mm)

Model	AR12-P				
Belt width (BW)	200	300	400	500	600
Machine width (FW)	270	370	470	570	670
Machine length (L)	1,000～6,000				
Machine height (H)	min500				
Frame	SUS304 120H (121: 2B material 122: #400 abrasive)				
Belt	Plastic modular belt, 2510 flat top, standard Habasit product				
Transport capacity	30 (kg/unit)				
Motor output	200W				
Power	100 VAC (single phase) / 200 VAC (single phase) / 200 VAC (three phase)				
Optional parts	Guide, legs, belt loosening device				

2510 (standard)
Flat top

2511 (optional)
Mesh top

2533 (optional)
Flash grid

- The standard belt material is polypropylene. Either of polyethylene or polypropylene can be selected depending on the application.
- Some types of modular belts are colored.

■Drawing

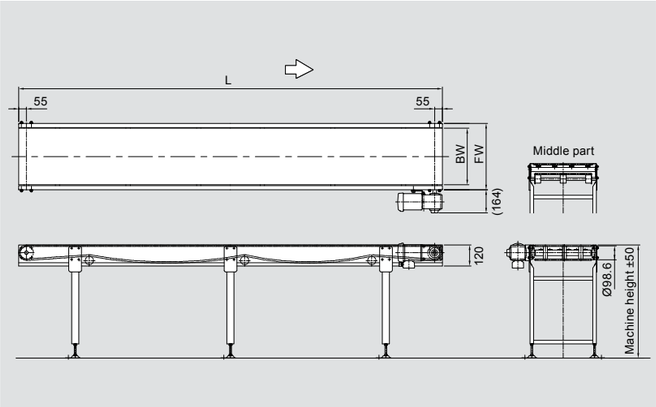

*A 2-m power cable comes with the conveyor. The single-phase 100 V power is attached with a plug.
The single-phase 200 V power and the three-phase 200 V power are delivered by a terminal box.
*The speed change type is recommended when the speed needs to be selected accurately.

■Conveyor speed table (Unit: m/min)

Constant speed		Speed change	
Symbol	50/60Hz	Symbol	20～60Hz
T1	2.8/3.3	H1	1.1～3.3
T2	4.4/5.3	H2	1.8～5.3
T3	5.5/6.6	H3	2.2～6.6
T4	7.4/8.8	H4	2.9～8.8
T5	8.8/10.6	H5	3.5～10.6
T6	11.0/13.2	H6	4.4～13.2
T7	14.7/17.7	H7	5.9～17.7
T8	17.7/21.2	H8	7.1～21.2

- Motor speed: 1,500 rpm/1,800 rpm (50 Hz/60 Hz)
- Drive efficiency: 95%
- Drive sprocket PCD: 98.6 mm

Note: The above table shows the speed under the condition of no load.

AR12-PC Plastic belt type

Stainless steel | Center drive/head drive | Light weight model | Inverter speed change | IP65

The conveyor can be washed with water and allows smooth curved conveyance!
The straight part and the curved part are integrated, and there is no need worry about loading works.

M2540
Curved flash grid

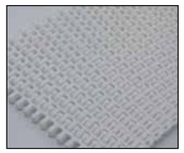

*The legs are available as option.

Rough standard transport capacity
30kg/ total length
Total length: 3 m
300BW
When dry

■How to look at a model

AR121	-	PC1	-	300	-	90R	-	1,000+1,500	-	H6	-	C200
AR121: 125H frame 2B material AR122: 125H frame #400 abrasive		Plastic belt curved type PC1: center drive PC2U: head drive placed on top PC2D: head drive placed on bottom PC2H: hollow shaft		Belt width (mm)		Number/ Angle R/ R type L/ L type		Machine length (mm) L1+L2		T/ Constant speed H/ Speed change Number/ Speed symbol		A/ Single-phase 100 V B/ Single-phase 200 V C/ Three-phase 200 V Number/ Motor output

■Specifications

(Unit: mm)

Model	AR12-PC				
Belt width (BW)	200	300	400	500	600
Machine width (FW)	265	365	465	565	665
Machine length (L)	L1 + curved part + L2 belt center length: max 5,000				
Machine height (H)	min500				
Frame	SUS304 125H (121: 2B material 122: #400 abrasive)				
Belt	Plastic modular belt, M2540 curved flat grid, standard Habasit product				
Transport capacity	30 (kg/unit)				
Motor output	200W				
Power	100 VAC (single phase) / 200 VAC (single phase) / 200 VAC (three phase)				
Optional parts	Guide, legs, belt loosening device				

■Conveyor speed table (Unit: m/min)

Constant speed		Speed change	
Symbol	50/60Hz	Symbol	20～60Hz
T1	2.8/3.3	H1	1.1～3.3
T2	4.4/5.3	H2	1.8～5.3
T3	5.5/6.6	H3	2.2～6.6
T4	7.4/8.8	H4	2.9～8.8
T5	8.8/10.6	H5	3.5～10.6
T6	11.0/13.2	H6	4.4～13.2
T7	14.7/17.7	H7	5.9～17.7
T8	17.7/21.2	H8	7.1～21.2

- Motor speed: 1,500 rpm/1,800 rpm (50 Hz/60 Hz)
- Drive efficiency: 95%
- Drive sprocket PCD: 98.6 mm

Note: The above table shows the speed under the condition of no load.

■Drawing

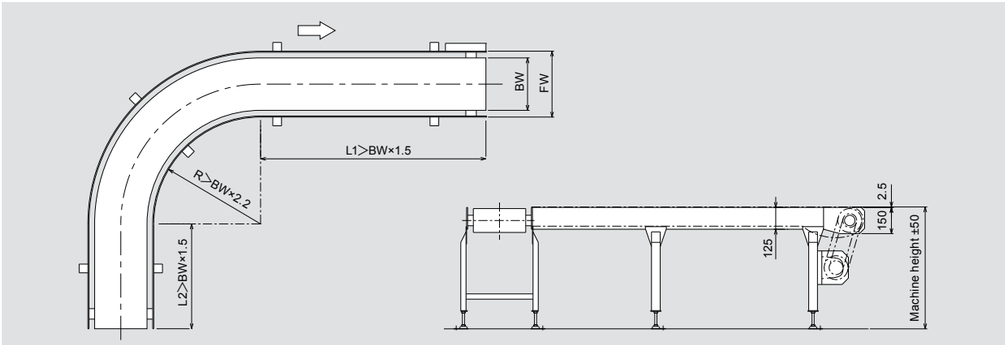

*A 2-m power cable comes with the conveyor. The single-phase 100 V power is attached with a plug. The single-phase 200 V power and the three-phase 200 V power are delivered by a terminal box.
*The speed change type is recommended when the speed needs to be selected accurately.

AR12-TD Resin top chain type
AR12-TC Resin top chain curved type

Stainless steel | Head drive | Light weight model | Inverter speed change | IP65

The head drive system top chain conveyor with a simple and sanitary design suitable for bottle washing lines. The conveyor is strong and sanitary and employs resin top chain, which allows smooth conveyance.

*The legs are available as option.

Rough standard transport capacity
30kg/ total length
Total length: 3 m
114.3PW
When dry

■How to look at a model

AR121	-	TD2	-	82.6	-	2,000	-	H6	-	A200
AR121: 125H frame 2B material AR122: 125H frame #400 abrasive		Resin top chain type TD2H: hollow shaft		Chain width (mm)		Machine length (mm)		T/ Constant speed H/ Speed change Number/ Speed symbol		A/ Single-phase 100 V B/ Single-phase 200 V C/ Three-phase 200 V Number/ Motor output

AR121	-	TC2	-	82.6	-	90R	-	1,000+1,500	-	H6	-	C200
AR121: 125H frame 2B material AR122: 125H frame #400 abrasive		Resin top chain curved type TC2H: hollow shaft		Chain width (mm)		Number/ Angle R/ R type L/ L type		Machine length (mm)		T/ Constant speed H/ Speed change Number/ Speed symbol		A/ Single-phase 100 V B/ Single-phase 200 V C/ Three-phase 200 V Number/ Motor output

■Conveyor speed table (Unit: m/min)

Constant speed		Speed change	
Symbol	50/60Hz	Symbol	50/60Hz
T1	3.0/3.6	H1	3.6～10.8
T2	5.0/6.0	H2	8.4～25.2
T3	10.0/12.0	H3	12.0～36.0
T4	20.0/24.0	–	–

● Motor speed: 1,500 rpm/1,800 rpm (50 Hz/60 Hz)
● Drive efficiency: 95%
Note: The above table shows the speed under the condition of no load.

■Specifications

(Unit: mm)

Model	AR12-TD2									AR12-TC2		
Chain width (PW)	63.5	76.2	82.6	101.6	114.3	127.0	152.4	165.1	190.5	82.6	114.3	190.5
Machine width (FW)	77	90	96	115	128	141	166	179	204	96	128	204
Machine length (L)	1,000～4,000									L1 + curved part + L2 Chain center length: max 4,000 (minimum chain radius: 600 R)		
Machine height (H)	min400											
Frame	SUS304 125H (121: 2B material 122: #400 abrasive)											
Chain	Resin top chain											
Transport capacity	30 (kg/unit)											
Motor output	200W											
Power	100 VAC (single phase) / 200 VAC (single phase) / 200 VAC (three phase)											
Optional parts	Guide, legs, ON/OFF switch											

■Drawing

AR12-TD

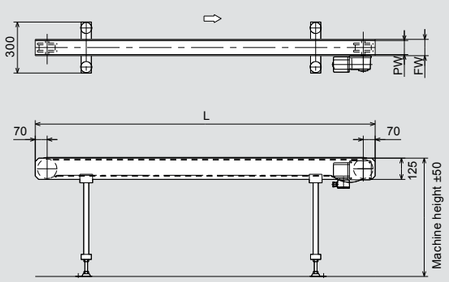

AR12-TC

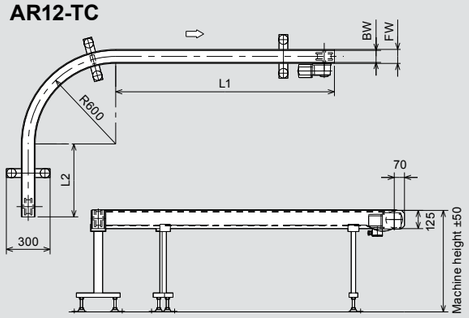

*A 2-m power cable comes with the conveyor. The single-phase 100 V power is attached with a plug. The single-phase 200 V power and the three-phase 200 V power are delivered by a terminal box.
*The speed change type is recommended when the speed needs to be selected accurately.

AR12-KD Drive roller type
AR12-MA Accumulation roller type

Stainless steel | Center drive | Medium weight model | Inverter speed change | IP65

Drive type and accumulation type conveyors suitable for medium weight loads. Unlike belt conveyor, roller conveyor have a large spatial area and good draining and air permeability. They are stain-resistant, easy to wash with water, and sanitary.

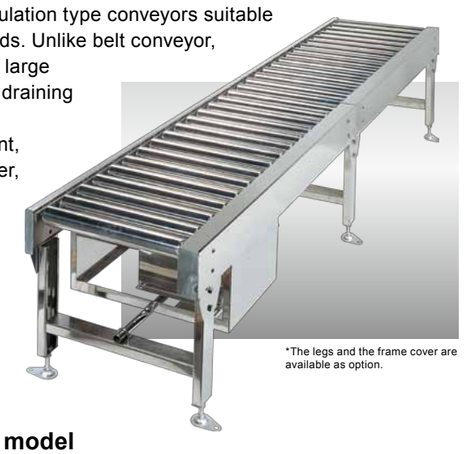
*The legs and the frame cover are available as option.

Rough standard transport capacity
50kg/ total length
Total length: 3 m
300RW
When dry

AR12-KD cross section

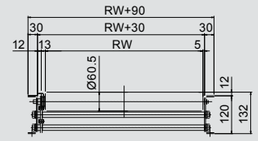

AR12-MA cross section

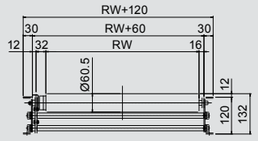

■How to look at a model

AR121	-	KD	-	300	-	75	-	1,000	-	H4	-	C200
AR121: 120H frame 2B material AR122: 120H frame #400 abrasive		Driven roller conveyor KD: drive type MA: accumulation type		Roller width (mm)		Roller interval (mm)		Machine length (mm)		T/ Constant speed H/ Speed change Number/ Speed symbol		A/ Single-phase 100 V B/ Single-phase 200 V C/ Three-phase 200 V Number/ Motor output

■Specifications

(Unit: mm)

Model	AR12-KD	AR12-MA
Roller	Outer dia. Ø 60.5 × thickness 1.5 × shaft dia. Ø 12	
Sprocket (roller part)	#40×10TS(SUS304)	
Roller width (RW)	300～1,000 (increments of 50)	
Roller interval (P)	75 100 150	
Machine length (L)	750～6,000	
Machine width (FW)	RW+90	RW+120
Machine height (H)	min450	
Frame	SUS304 ［120×30×3 (121: 2B material 122: #400 abrasive)	
Transport capacity	50(kg/m)	
Motor output	200W･400W･750W	
Power	100 VAC (single phase) / 200 VAC (single phase) / 200 VAC (three phase)	
Optional parts	Guide, legs, ON/OFF switch *The standard drive chain is plated steel.	

■Conveyor speed table (Unit: m/min)

Constant speed		Speed change	
Symbol	50/60Hz	Symbol	20～60Hz
T1	3.3/4.0	H1	1.3～4.0
T2	4.1/4.9	H2	1.6～4.9
T3	5.5/6.6	H3	2.2～6.6
T4	6.6/7.9	H4	2.6～7.9
T5	8.3/9.9	H5	3.3～9.9
T6	11.0/13.2	H6	4.4～13.2
T7	13.2/15.8	H7	5.3～15.8
T8	16.5/19.8	H8	6.6～19.8
T9	22.0/26.4	H9	8.3～26.4

● Motor speed: 1,500 rpm/1,800 rpm (50 Hz/60 Hz)
● Drive efficiency: 95%
Note: The above table shows the speed under the condition of no load.

■Drawing

AR12-KD

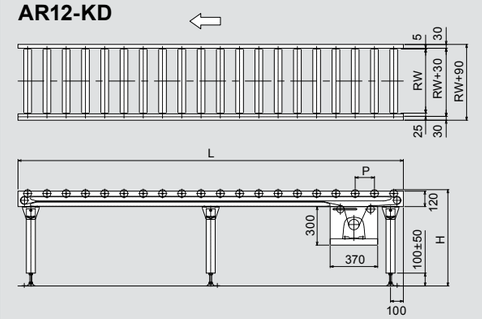

AR12-MA

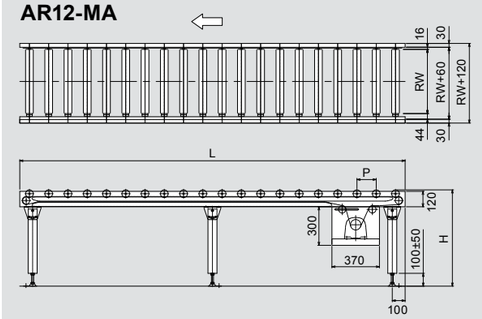

*A 2-m power cable comes with the conveyor. The single-phase 100 V power is attached with a plug. The single-phase 200 V power and the three-phase 200 V power are delivered by a terminal box.
*The speed change type is recommended when the speed needs to be selected accurately.

AR12-RC Drive roller curved type

Stainless steel | Center drive | Medium weight model | Inverter speed change | IP65

Curved conveyor necessary for layout.
Powerful conveyance is secured by the reliable chain drive system.
The tapered rollers are embedded for smooth conveyance.

*The legs are available as option.

Rough standard transport capacity
80kg/unit 300RW When dry

■How to look at a model

AR121	-	RC900	-	300	-	100	-	90R	-	H4	-	C200
AR121: 120H frame 2B material AR122: 120H frame #400 abrasive		Drive roller curved type RC 900, inside R 900		Roller width (mm)		Roller interval (mm)		Number/ Angle R/ R type L/ L type		T/ Constant speed H/ Speed change Number/ Speed symbol		A/ Single-phase 100 V B/ Single-phase 200 V C/ Three-phase 200 V Number/ Motor output

■Specifications

(Unit: mm)

Model	AR12-RC900
Roller	Inner dia. Ø 42.7 (SUS304)
Sprocket (roller part)	#40×10TS(SUS304)
Roller width (RW)	300～600
Roller interval (P)	75 100
Curve inside R	900
Machine width (FW)	RW+90
Machine height (H)	min450
Frame	SUS304 [120 × 30 × 3 (121: 2B material 122: #400 abrasive)
Transport capacity	80 (kg/unit)
Motor output	200W･400W
Power	100 VAC (single phase) / 200 VAC (single phase) / 200 VAC (three phase)
Optional parts	Guide, legs, ON/OFF switch *The standard drive chain is plated steel.

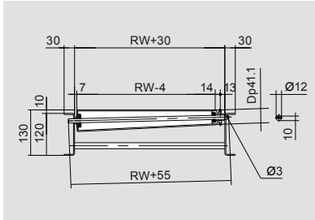

■Drawing

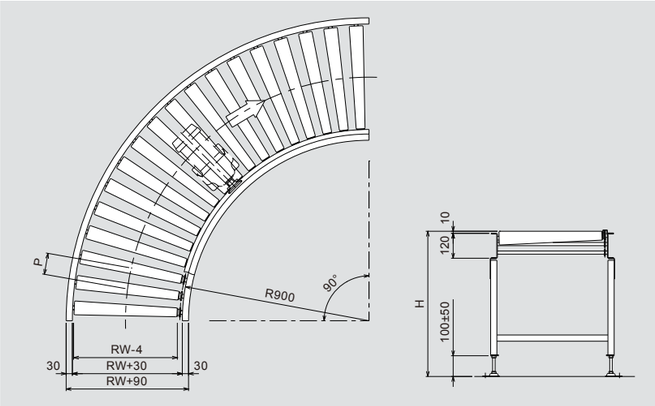

*A 2-m power cable comes with the conveyor. The single-phase 100 V power is attached with a plug.
The single-phase 200 V power and the three-phase 200 V power are delivered by a terminal box.
*The speed change type is recommended when the speed needs to be selected accurately.

■Conveyor speed table

(Unit: m/min)

Constant speed		Speed change	
Symbol	50/60Hz	Symbol	20～60Hz
T1	3.3/4.0	H1	1.3～4.0
T2	4.1/4.9	H2	1.6～4.9
T3	5.5/6.6	H3	2.2～6.6
T4	6.6/7.9	H4	2.6～7.9
T5	8.3/9.9	H5	3.3～9.9
T6	11.0/13.2	H6	4.4～13.2
T7	13.2/15.8	H7	5.3～15.8
T8	16.5/19.8	H8	6.6～19.8
T9	22.0/26.4	H9	8.3～26.4

● Motor speed: 1,500 rpm/1,800 rpm (50 Hz/60 Hz)
● Drive efficiency: 95%
Note: The above table shows the speed under the condition of no load.

Optional parts

Belt (urethane)

No	Standard	Standard	1	2	3	4
Color	White	White	White	White	White	White
Number of ply	1	2	2	2	1	2
Surface material	Polyurethane	Polyurethane	Polyurethane	Polyurethane	Polyurethane	Polyurethane
Belt thickness	0.8mm	1.4mm	1.7mm	1.3mm	0.8mm	1.4mm
Minimum pulley diameter	Ø15 Finger E	Ø20 Finger E	Ø25 Finger E	Ø20 Finger E	Ø25 Finger E	Ø30 Finger E
Operating temperature range (°C)	−20～+80	−20～+80	−20～+80	−20～+80	−10～+80	−20～+80
Antistatic treatment	Yes	Yes	Yes	Yes	Yes	Yes
Characteristics All types are suitable for food Yes	Antibacterial Antifungal Selvage fray prevention Low profile Resistance to moist heat	Antibacterial Antifungal Selvage fray prevention Low profile Resistance to moist heat	Antibacterial Antifungal Selvage fray prevention Low profile Resistance to moist heat For troughs	Selvage fray prevention Slipperiness	Antibacterial Antifungal Selvage fray prevention Low profile Resistance to moist heat	Antibacterial Antifungal Selvage fray prevention Low profile Resistance to moist heat
Compatible models	AR40・AR60 V1 and V2 are excluded.	AR40・AR60 V1・V2 K1・K2 R1 and R2 are excluded.	AR40・AR60 K1・K2・R1 and R2 are excluded.	AR40・AR60 V1・V2 K1・K2 R1 and R2 are excluded.	AR40・AR60 V1・V2 K1・K2 R1 and R2 are excluded.	AR40・AR60 V1・V2 K1・K2 R1 and R2 are excluded.

Standard
WEU-6ANF
General belt for food (1-ply)

Standard
WEU-12ANF
General belt for food (2-ply)

No.1
Trough type belt for food (2-ply)

No.2
Selvage fray prevention/ slip belt (2-ply)

No.6
Anti-stick belt for viscous works (2-ply)

5	6	7	8	9	10	11	12
White	Blue	White	Blue	White	Green	Blue	Blue
2	2	1	1	2	1	×	×
Thermoplastic polyolefin (TPO)	Thermoplastic polyolefin (TPO)	Polyurethane	Polyurethane	Hard polyurethane	Polyurethane impregnated	Single polyurethane	Single polyurethane
1.05mm	1.05mm	0.8mm	0.8mm	0.8mm	0.6mm	2.0mm	2.0mm
Ø15 Finger E	Ø15 Finger E	Ø15 Finger E (electric type)	Ø15 Finger E (electric type)	Ø15 Finger E (electric type)	Ø20 Finger E (electric type)	Ø30 Butt welding	Ø30 Butt welding
−40～+80	−40～+80	0～+80	0～+80	0～+80	0～+80	−30～+60	−30～+60
Yes	Yes	Yes	Yes	Yes	Yes	No	No
High mold releasing property Oil and grease proof	High mold releasing property Oil and grease proof	Antibacterial Antifungal Anti-stick Super mirror surface	Antibacterial Antifungal Anti-stick Super mirror surface	Selvage fray prevention Slipperiness *Water is unacceptable.	Selvage fray prevention Slipperiness *Water is unacceptable.	Meet conveyance Raw fish conveyance Both sides smooth	Meet conveyance Raw fish conveyance Smooth surface Pulley surface Fabric-like surface
AR40・AR60	AR40・AR60	AR40・AR60	AR40・AR60	AR40・AR60	AR40・AR60	AR40・AR60	AR40・AR60
V1・V2 K1・K2 R1 and R2 are excluded.	V1・V2 K1・K2 R1 and R2 are excluded.	V1・V2 K1・K2 R1 and R2 are excluded.	V1・V2 K1・K2 R1 and R2 are excluded.	V1・V2 K1・K2 R1 and R2 are excluded.	V1・V2 K1・K2 R1 and R2 are excluded.	V1・V2 K1・K2 R1 and R2 are excluded.	V1・V2 K1・K2 R1 and R2 are excluded.

No.7
Belt with excellent washability (2-ply)

No.8
Belt with excellent washability (2-ply)

No.9
Selvage fray prevention/slip belt (1-ply)

No.10
Impregnation type selvage fray prevention/slip belt (1-ply)

No.11
Suitable for carrying raw meet/fish

No.12
Suitable for carrying raw meet/fish, fabric-like back surface

Optional parts

Belt (plastic modular type)

No	1	2	3	4	5	6
Name	Flash grid	Nub top	Flat top	Flat top	Flash grid	P flash grid
Thickness × pitch	7×12.7	11.5×12.7	11×25.6	10×25.4	10×25.4	11×25.7
Aperture ratio	50%	18%	0%	0%	35%	48%
Surface material (Color) (Operating temperature range)	PP	PP	PP	PP	PP	PP
	White	White	White/gray	White/gray	White/gray	White/gray
	5～90℃	5～90℃	5～90℃	5～90℃	5～90℃	5～90℃
		PE	PE	PE	PE	
		Blue	Blue/ translucent	Translucent	Blue/ translucent	
		−70～65℃	−70～65℃	−70～65℃	−70～65℃	
	POM		POM	POM	POM	POM
	White		White/blue	White/blue	Blue	White
	−40～90℃		−40～90℃	−40～90℃	−40～90℃	−40～90℃
Sprocket diameter (number of teeth)	Ø49.8(12)	Ø41.2(12)	Ø66.7(8)	Ø66.7(8)	Ø66.7(8)	Ø66.7(8)
	Ø70.2(17)	Ø62.4(15)	Ø98.6(12)	Ø98.6(12)	Ø98.6(12)	Ø98.6(12)
	Ø98.8(24)	Ø99.2(24)	Ø122.7(15)	Ø122.7(15)	Ø122.7(15)	Ø122.7(15)
Available minimum width	203W	150W	50W	50W	150W	305W
Available maximum width	1,000W *	1,000W *	1,000W *	1,000W *	1,000W *	1,000W *
Compatible models	AR12-P1	AR12-P1	AR12-P1	AR12-P1	AR12-P1	AR12-P1
	AR12-P2	AR12-P2	AR12-P2	AR12-P2	AR12-P2	AR12-P2

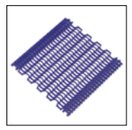

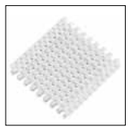

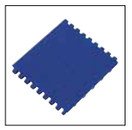

*Contact us for 1,000 W or above.
PP: Polypropylene PE: Polyethylene POM: Polyoxymethylene AC: Acetal PA: Polyamide

No	7	8	9	10	11	12
Name	Curved flash grid	Tight curve	Heat resistance	Conductivity	Incombustibility	Flight
Thickness × pitch	11×25.6	12.7×25.8	10×25.4	10×25.4	10×25.4	25.4×H×L
Aperture ratio	35%	35%	0%	0%	0%	
Surface material (Color) (Operating temperature range)	PP	PP	PA	PP	PP	POM
	White/gray	White/gray	Beige	Black	Dark green	White
	5～90℃	5～90℃	0～170℃	5～90℃	5～90℃	
				PA	PA	
				Black	Dark green	
				−40～90℃	−40～130℃	
	POM	POM				
	White/blue	White				
Sprocket diameter (number of teeth)	Ø66.7(8)	Ø66.7(8)	Ø66.7(8)	Ø66.7(8)	Ø66.7(8)	
	Ø98.6(12)	Ø98.6(12)	Ø98.6(12)	Ø98.6(12)	Ø98.6(12)	
	Ø122.7(15)	Ø122.7(15)	Ø122.7(15)	Ø122.7(15)	Ø122.7(15)	
Available minimum width	206W	250W	50W	50W	50W	
Available maximum width	606W	1,000W	1,000W *	1,000W *	1,000W *	
Compatible models	AR12-PC1	AR12-PC1	AR12-P1	AR12-P1	AR12-P1	AR12-P1
	AR12-PC2	AR12-PC2	AR12-P2	AR12-P2	AR12-P2	AR12-P2

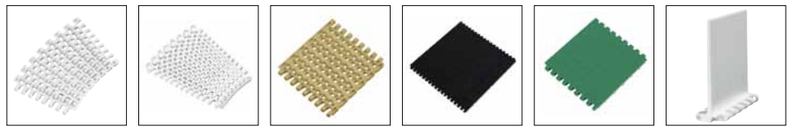

*The inside R of the curved conveyor and the length of the straight part depend on the belt width. Contact us for details.

Optional parts

Belt (Teflon mesh)

No	1	2	3	4	5	6	7	8
Thickness	0.85mm	0.6mm	0.85mm	0.65mm	0.78mm	0.35mm	0.8mm	0.9mm
	Mesh	Mesh	Mesh	Mesh	Mesh	Plain weave	Mesh	Mesh
Material	ARAMID cloth Fluororesin Coat	ARAMID cloth Fluororesin Coat	ARAMID cloth Fluororesin Coat	ARAMID cloth Fluororesin Coat	ARAMID cloth Fluororesin Coat	GLASS cloth Fluororesin Coat	GLASS cloth Fluororesin Coat	GLASS cloth Fluororesin Coat
Pulley diameter (Urethane lining hardness 70)	DP Ø90	DP Ø90	DP Ø90	DP Ø90	DP Ø90	DP Ø90	DP Ø90	DP Ø90
	TP Ø60	TP Ø60	TP Ø60	TP Ø60	TP Ø60	TP Ø60	TP Ø60	TP Ø60
Available minimum width	100W	100W	100W	100W	100W	100W	100W	100W
Allowable temperature range (°C)	−100～200	−100～200	−100～200	−100～200	−100～200	−100～260	−100～260	−100～260
Compatible models	AR60-F2	AR60-F2	AR60-F2	AR60-F2	AR60-F2	AR60-F2	AR60-F2	AR60-F2

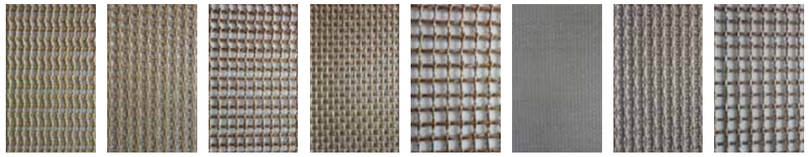

*The antistatic type is also available.
*All the belts have reinforcement on both selvages and Maxliner (cleat for preventing meander) on the back surface of both sides.

Optional parts

Belt (stainless steel net)

No	1	2	3	4
Name	SUS balance net	SUS herringbone	SUS balance net with chain	SUS wire belt
Wire diameter	1mm～3mm	1mm～2mm	1mm～3mm	1mm～3mm
Both side chain			2040～2060	
Pitch	5mm～20mm	4.5mm～20mm	5mm～20mm	7mm～20mm
Operating temperature range	0℃～250℃	0℃～250℃	0℃～250℃	0℃～250℃
Available minimum width	50W	100W	100W	100W
Available maximum width	3,000W	1,000W	3,000W	2,000W
Compatible models	AR15-BN	AR15-BN	AR15-BN	AR90-CN
				AR90-CNC

*Consult us for other specifications besides the above.

Optional parts of Araeel

MAKITECH DRIVEN CONVEYOR

Optional parts

■How to look at a model

AR01	-	4G	L1
AR01 (2B material) AR02 (#400 abrasive)		4G (for 40-frame) 6G (for 60-frame)	Type

Guide for 40 H frame

AR01-4GL1/AR02-4GL1
Fixed type

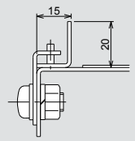

AR01-4GS1/AR02-4GS1
Height width adjustment type

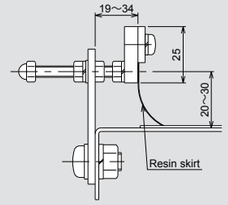

AR01-4GF1/AR02-4GF1
Height adjustment type

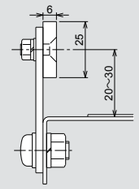

AR01-4GF2/AR02-4GF2
Height width adjustment type

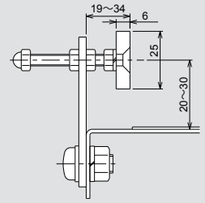

AR01-4GP1/AR02-4GP1
Height adjustment type

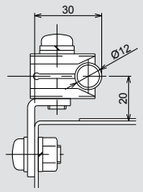

AR01-4GP2/AR02-4GP2
Height width adjustment type

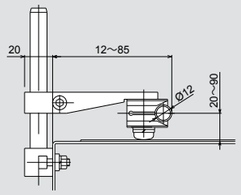

AR01-4GJ1/AR02-4GJ1
Height adjustment type

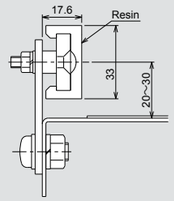

AR01-4GJ2/AR02-4GJ2
Height width adjustment type

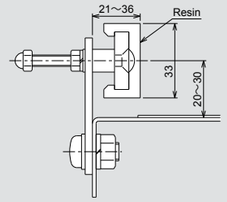

Guide for 60 H frame

AR01-6GL1/AR02-6GL1
Fixed type

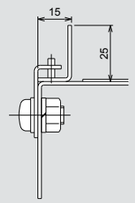

AR01-6GS1/AR02-6GS1
Height width adjustment type

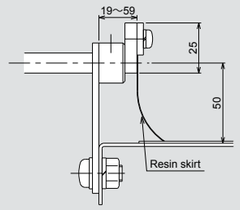

AR01-6GF1/AR02-6GF1
Height adjustment type

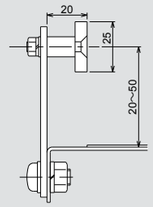

AR01-6GF2/AR02-6GF2
Height width adjustment type

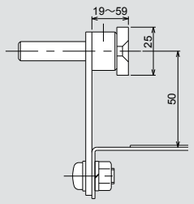

AR01-6GP1/AR02-6GP1
Height adjustment type

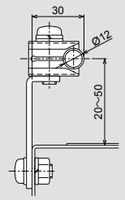

AR01-6GP2/AR02-6GP2
Height width adjustment type

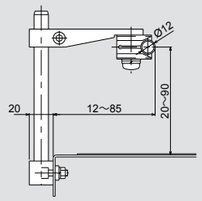

AR01-6GJ1/AR02-6GJ2
Height adjustment type

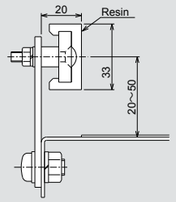

AR01-6GJ2/AR02-6GJ2
Height width adjustment type

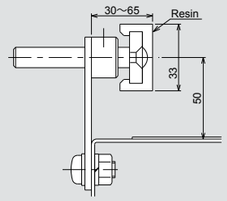

Work table

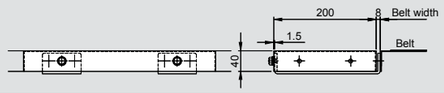

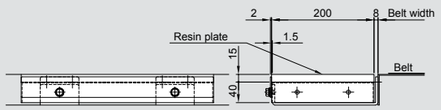

Optional parts of Araeel

Stand for conveyors

AR01-SH/AR02-SH
Standard leg

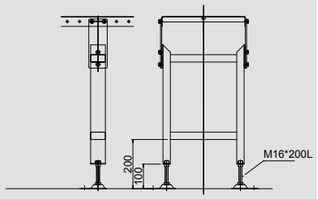

Compatible conveyor models
AR40 -S1 -G1 -R1 -K1
-S2 -G2 -R2 -K2
-V2 -D2
AR60 -S1 -G1 -R1 -K1
-S2 -G2 -R2 -K2
-V2 -D2

AR01-DH/AR02-DH
Detachable leg

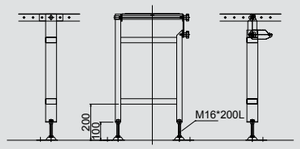

Compatible conveyor models
AR40 -U1 -U2
AR60 -U1 -U2

AR01-WSH/AR02-WSH
Splayed tapered/standard leg

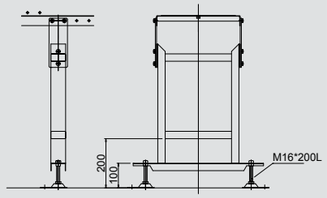

Compatible conveyor models
AR40 -S1 -G1 -R1 -K1
-S2 -G2 -R2 -K2
-V2 -D2
AR60 -S1 -G1 -R1 -K1
-S2 -G2 -R2 -K2
-V2 -D2
AR90 -CN1 -CN2
-CNC1 -CNC2
AR15 -BN1 -BN2
AR12 -P1 -P2
-PC1 -PC2

AR01-WDH/AR02-WDH
Splayed tapered/detachable leg

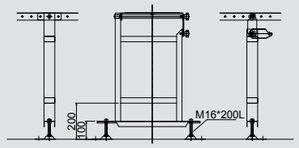

Compatible conveyor models
AR40 -U1 -U2
AR60 -U1 -U2

AR01-TH/AR02-TH
Leg for top chain

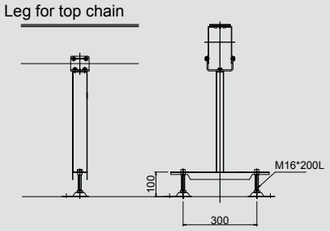

Compatible conveyor models
AR12 -TD -TC

AR01-CH/AR02-CH
Leg for roller conveyors

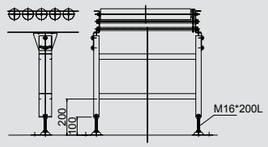

Compatible conveyor models
AR12 -KD -MA
-RC500 -RC900
AR60 -CA -CD
AR90 -CN1 -CN2
-CNC1 -CNC2
AR15 -BN1 -BN2
AR12 -P1 -P2
-PC1 -PC2
AR40 -S1 -G1 -R1 -K1
-S2 -G2 -R2 -K2
-V2 -D2
AR60 -S1 -G1 -R1 -K1
-S2 -G2 -R2 -K2
-V2 -D2

Inverter box

*Waterproof

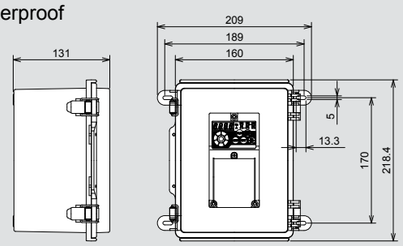

Scraper/tray

*For head drive

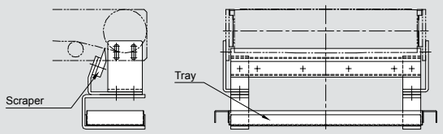

VERTICAL CONVEYOR LIFTER

CONTENTS

What is a vertical conveyor?

A vertical slat conveyor that can be used as production and conveyance equipment of factories. It is unnecessary to carry in and out things or directly intervene. The work efficiency will be improved greatly because there is no need to wait for calling of the load carrying platform or door opening/closing. Full automation can be realized by making the layout with our conveyors.

Vertical conveyors for continuous vertical conveyance

Case conveyor

•100-kg type	MCZ-100・MCC-100	P100
•250-kg type	MCZ-250・MCC-250	P102

Pallet conveyor

•500-kg type	MPZ-500・MPC-500	P102
•1000-kg type	MPZ-1000・MPC-1000	P104
•1500-kg type	MPZ-1500・MPC-1500	P106

Clean environment type

•12-kg type	MCPZ-12・MCPC-12	P108

Vertical lifter for reciprocating vertical conveyance

Reciprocating vertical conveyor

•50-kg aluminum type	BEL	P110
•50-kg steel type	JEL	P111
•200-kg type	JEL-200	P112
•500-kg type	JEL-500	P113
•1000-kg type	JEL-1000	P113

Difference between vertical conveyor and vertical lifter

A vertical conveyor that carries things continuously has a transport capacity at least twice as large as that of a vertical lifter because the load carrying platform carries things without reciprocating. The transport capacity can further be enhanced by increasing the number of slats.

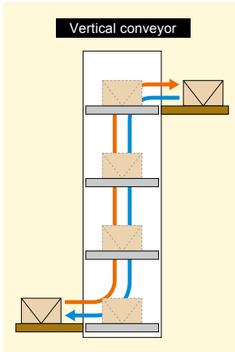

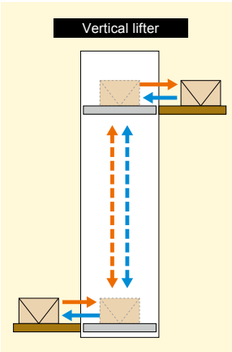

Rough standard for which type to use

<When the carried items are 50 kg or below and the lifting height is 5 m>
•Vertical conveyor: 120 pieces or more/hour
•Vertical lifter: 120 pieces or less/hour

*Contact our person in charge for details.

MCZ-100 MCC-100 Vertical conveyor

Continuous conveyance | Maximum transport load 100 kg

Carries things vertically and continuously in a small space between two fixed points. Many variations are available depending on the size of the items to be carried. High-level conveyance of maximum transport capacity of 1,200 pieces (600 pieces)/hour, which is the feature of the vertical conveyor (continuous conveyance), is realized.

Control panel
(The signal tower is available as option.)

■ Specifications

(Unit: mm)

Model	MCZ-100	MCC-100
Direction of conveyance	Z type (type with entrance and exit on front and back)	C type (type with entrance and exit on the same surface)
Drive system	Chain drive (#60)	
Movable load	Max 100 kg/slat (specified in dimension table)	
Lifting height	Max 25000	
Loading height	Min 500 (Min 700 when the lifting height exceeds 6,000 mm)	
Nominal frontage (W)	700W 900W 1100W	
Nominal depth (L)	820L 1010L 1200L	
Transport velocity	15m/min 20m/min 25m/min 30m/min	
Motor output	0.75kW 1.5kW 2.2kW 3.7kW	
Power supply	220 VAC (three phase) × 60 Hz 200 VAC (three phase) × 50 Hz	
Control power	Standard: 24 VDC Option: 200 VAC (single phase), 100 VAC	
Exterior	Standard: steel sheet Option: PET resin, expand metal	
Paint color	Major green S31-513 (Japan Paint Manufacturers Association Standard Paint Colors) Close to Munsell symbol 2.5G 6/3	
Safety device	Stop failure detection PH, loading check PH, delivery detection, optional devices (product height detection PH, fall detection PH)	
Separate estimate	Loading conveyor, fire shutter, control panel, operation panel, electric wiring work inside machine	

Model indication

MCZ - 100 - 5000 - 800 - 1010 - 20 - 1.5

- MCZ: Type C:Case conveyor; Direction of conveyance C: Type with entrance and exit on the same surface Z: Type with entrance and exit on front and back
- 100: Withstand load Max100kg
- 5000: Lifting height (mm)
- 800: Nominal frontage (mm)
- 1010: Nominal depth (mm)
- 20: Transport velocity (m/min)
- 1.5: Motor capacity (kW)

*Please note that the transport capacity differs depending on various factors.

Continuous vertical case conveyor

MAKITECH DRIVEN CONVEYOR

MCZ-100 model

(Unit: mm)

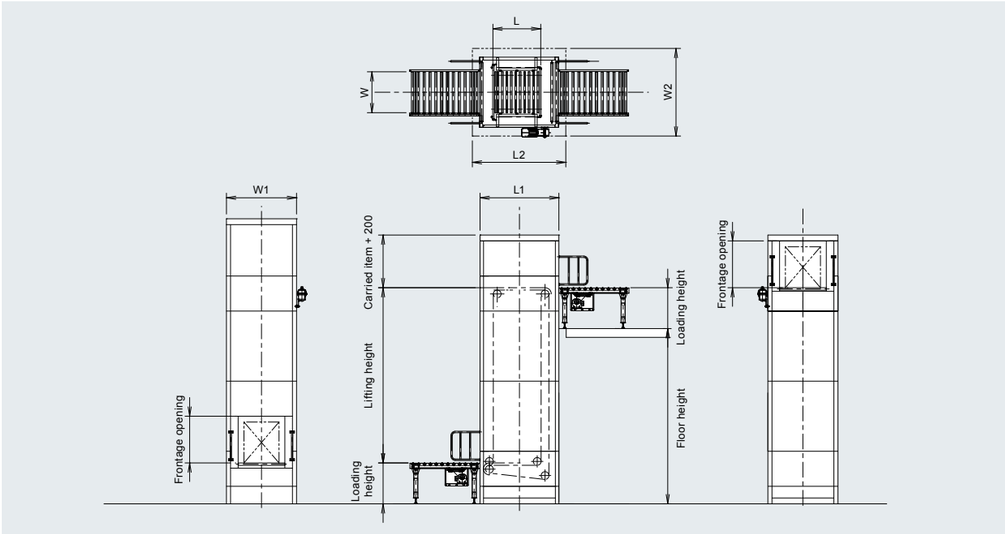

MCC-100 model

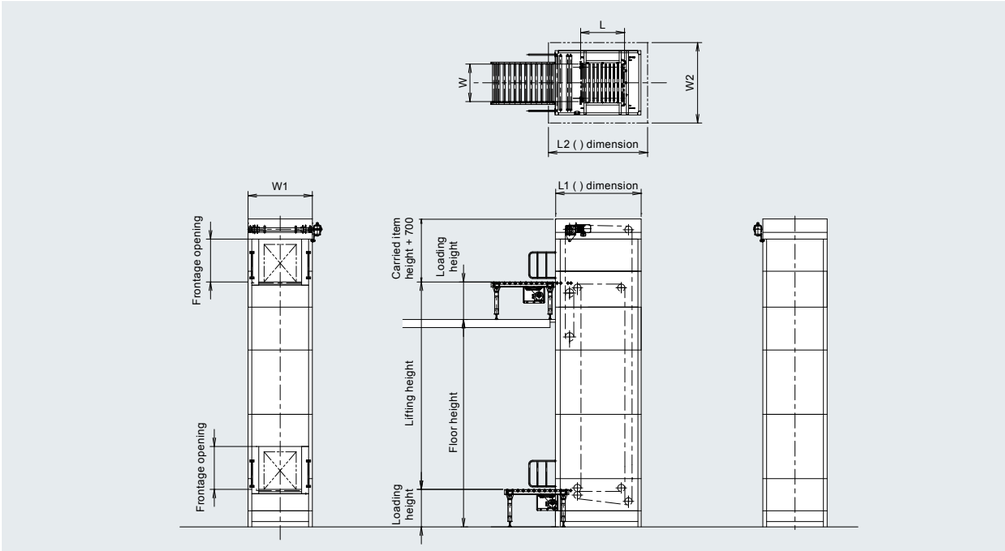

■Dimension table

(Unit: mm)

Load carrying platform dimensions		Max. item to be carried			Max. carrying capacity	Body dimensions		Floor opening dimensions		Loading height
Nominal frontage (W)	Nominal depth (L)	Width	Length	Height	Load (kg)	Width (W1)	Depth (L1)	Width (W2)	Depth (L2)	Min. dimension
600	705	500	500	600	100	1100	1236（1486）	1400	1500（1700）	500（700）
	819		600		100		1350（1600）		1600（1800）	500（700）
	1200		1000		80		1731（1981）		2000（2200）	600（700）
800	705	700	500	800	100	1300	1236（1486）	1600	1500（1700）	500（700）
	819		600		100		1350（1600）		1600（1800）	500（700）
	1200		1000		80		1731（1981）		2000（2200）	600（700）
1000	705	900	500	1000	100	1500	1236（1486）	1900	1500（1700）	500（700）
	819		600		80		1350（1600）		1600（1800）	500（700）
	1200		1000		70		1731（1981）		2000（2200）	600（700）

*The maximum carrying capacity is a value indicated by a distributed load. Please note that it differs depending on the condition.
*The numbers in the ( ) of the body and the opening indicate the dimension of the MCC model.
*The numbers in the ( ) of the loading height indicate the numbers when the lifting height is high.
*The above dimensions may be changed.

MCZ-250 MCC-250 MPZ-500 MPC-500 Vertical conveyor

Continuous conveyance | Maximum transport load 250 kg | Maximum transport load 500 kg

Carries things vertically and continuously in a small space between two fixed points. Many variations are available depending on the size of the items to be carried. High-level conveyance of maximum transport capacity of 150 pieces (100 pieces)/hour, which is the feature of the vertical conveyor (continuous conveyance), is realized.

Control panel
(The signal tower is available as option.)

■ Specifications

(Unit: mm)

Model	250-kg type		500-kg type	
	MCZ-250	MCC-250	MPZ-500	MPC-500
Direction of conveyance	Z type (type with entrance and exit on front and back)	C type (type with entrance and exit on the same surface)	Z type (type with entrance and exit on front and back)	C type (type with entrance and exit on the same surface)
Drive system	Chain drive (#80)		Chain drive (#80)	
Movable load	Max 250 kg/slat (specified in dimension table)		Max 500 kg/slat (specified in dimension table)	
Lifting height	Max 20000		Max 20000	
Loading height	Min 700		Min 700	
Nominal frontage (W)	1000W 1200W		1300W 1400W	
Nominal depth (L)	1250L 1400L		1450L 1500L	
Transport velocity	15/18m/min (50/60Hz)		10/12m/min (50/60Hz)	
Motor output	2.2kW 3.7kW		3.7kW 5.5kW	
Power supply	220 VAC (three phase) × 60 Hz 200 VAC (three phase) × 50 Hz			
Control power	Standard: 24 VDC Option: 200 VAC (single phase), 100 VAC			
Exterior	Standard: steel sheet Option: PET resin, expand metal			
Paint color	Major green S31-513 (Japan Paint Manufacturers Association Standard Paint Colors) Close to Munsell symbol 2.5G 6/3			
Safety device	Stop failure detection PH, loading check PH, delivery detection, optional devices (product height detection PH, fall detection PH)			
Separate estimate	Loading conveyor, fire shutter, control panel, operation panel, electric wiring work inside machine			

Model indication

MPZ - 500 - 20000 - 1400 - 1500 - 12 - 5.5

- Type: P: Pallet conveyor / C: Case conveyor
- Direction of conveyance: C: Type with entrance and exit on the same surface / Z: Type with entrance and exit on front and back
- Withstand load: Max250kg / Max500kg
- Lifting height (mm)
- Nominal frontage (mm)
- Nominal depth (mm)
- Transport velocity (m/min)
- Motor capacity (kW)

*Please note that the transport capacity differs depending on various factors.

MAKITECH DRIVEN CONVEYOR

MCZ-250 model MPZ-500 model

(Unit: mm)

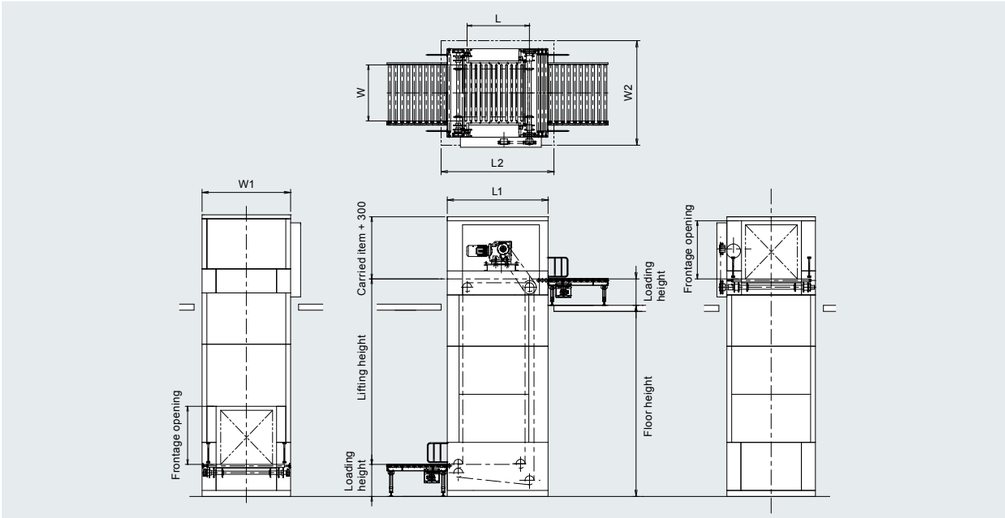

MCC-250 model MPC-500 model

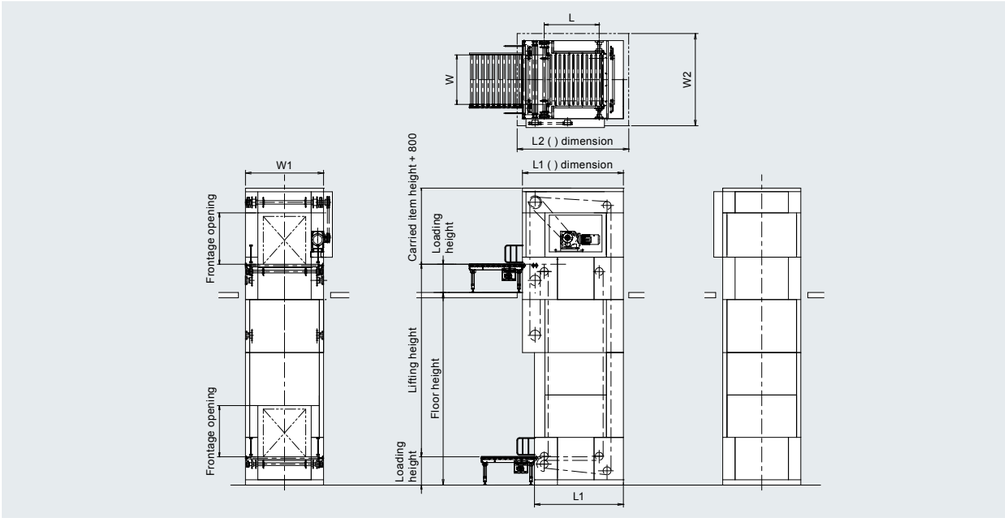

■ MCZ-250 MCC-250 (250-kg type)

(Unit: mm)

Load carrying platform dimensions		Max. item to be carried			Max. carrying capacity	Body dimensions		Floor opening dimensions		Loading height
Nominal frontage (W)	Nominal depth (L)	Width	Length	Height	Load (kg)	Width (W1)	Depth (L1)	Width (W2)	Depth (L2)	Min. dimension
1000	1250	900	900	1000	250	1500	1960(2230)	1800	2200(2500)	700
	1400		1100				2110(2380)		2400(2600)	
1200	1250	1100	900			1700	1960(2230)	2000	2200(2500)	
	1400		1100				2110(2380)		2400(2600)	

■ MPZ-500 MPC-500 (500-kg type)

Load carrying platform dimensions		Max. item to be carried			Max. carrying capacity	Body dimensions		Floor opening dimensions		Loading height
Nominal frontage (W)	Nominal depth (L)	Width	Length	Height	Load (kg)	Width (W1)	Depth (L1)	Width (W2)	Depth (L2)	Min. dimension
1300	1450	1100	1100	1500	500	2000	2200(2550)	2400	2500(2900)	700
	1500		1200				2250(2600)		2600(3000)	
1400	1450	1200	1100			2100	2200(2550)	2500	2500(2900)	
	1500		1200				2250(2600)		2600(3000)	

*The maximum carrying capacity is a value indicated by a distributed load. Consult us because it differs depending on the condition.
*The numbers in the ( ) of the body and the opening indicate the dimension of the MPC model. *The above dimensions may be changed.

MPZ-1000 MPC-1000 Vertical conveyor

Continuous conveyance | Maximum transport load 1,000 kg

Carries things vertically and continuously in a small space between two fixed points. Many variations are available depending on the size of the items to be carried. High-level conveyance of maximum transport capacity of 150 (100)/hour, which is the feature of the vertical conveyor (continuous conveyance), is realized.

Control panel
(The signal tower is available as option.)

■ Specifications

(Unit: mm)

Model	MPZ-1000	MPC-1000
Direction of conveyance	Z type (type with entrance and exit on front and back)	C type (type with entrance and exit on the same surface)
Drive system	Chain drive (#100)	
Movable load	Max 1,000 kg/slat (specified in dimension table)	
Lifting height	Max 20000	
Loading height	Min 700	
Nominal frontage (W)	1300W 1500W	
Nominal depth (L)	1430L 1620L	
Transport velocity	10/12 m/min（50/60Hz）	
Motor output	5.5kW 7.5kW 11kW	
Power supply	220 VAC (three phase) × 60 Hz 200 VAC (three phase) × 50 Hz	
Control power	Standard: 24 VDC Option: 200 VAC (single phase), 100 VAC	
Exterior	Standard: steel sheet Option: PET resin, expand metal	
Paint color	Major green S31-513 (Japan Paint Manufacturers Association Standard Paint Colors) Close to Munsell symbol 2.5G 6/3	
Safety device	Stop failure detection PH, loading check PH, delivery detection, optional devices (product height detection PH, fall detection PH)	
Separate estimate	Loading conveyor, fire shutter, control panel, operation panel, electrical wiring work inside machine	

Model indication

MPZ - 1000 - 6000 - 1300 - 1620 - 10 - 7.5

- MPZ: Type (P: Pallet conveyor); Direction of conveyance (C: Type with entrance and exit on the same surface / Z: Type with entrance and exit on front and back)
- 1000: Withstand load Max1000kg
- 6000: Lifting height (mm)
- 1300: Nominal frontage (mm)
- 1620: Nominal depth (mm)
- 10: Transport velocity (m/min)
- 7.5: Motor capacity (kW)

*Please note that the transport capacity differs depending on various factors.

MAKITECH DRIVEN CONVEYOR

MPZ-1000 model

(Unit: mm)

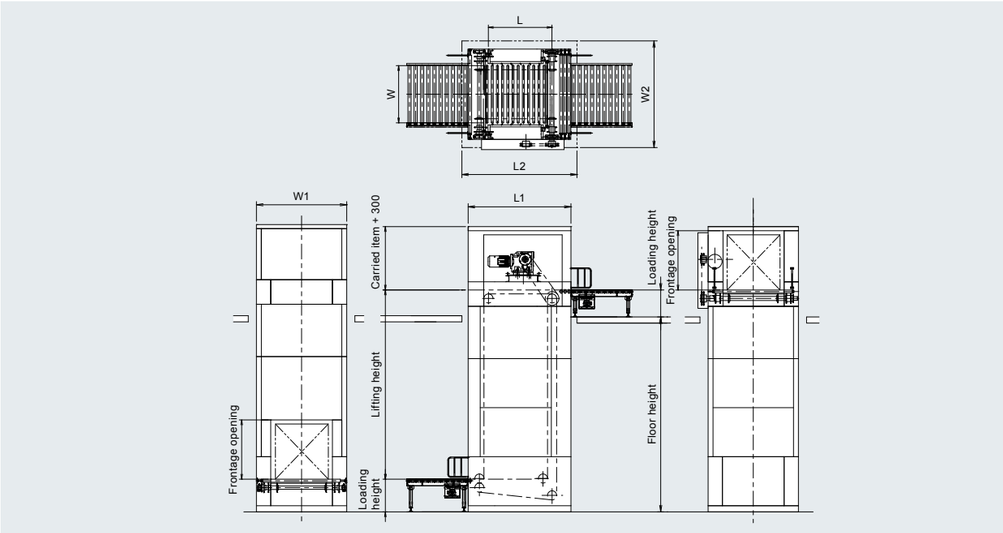

MPC-1000 model

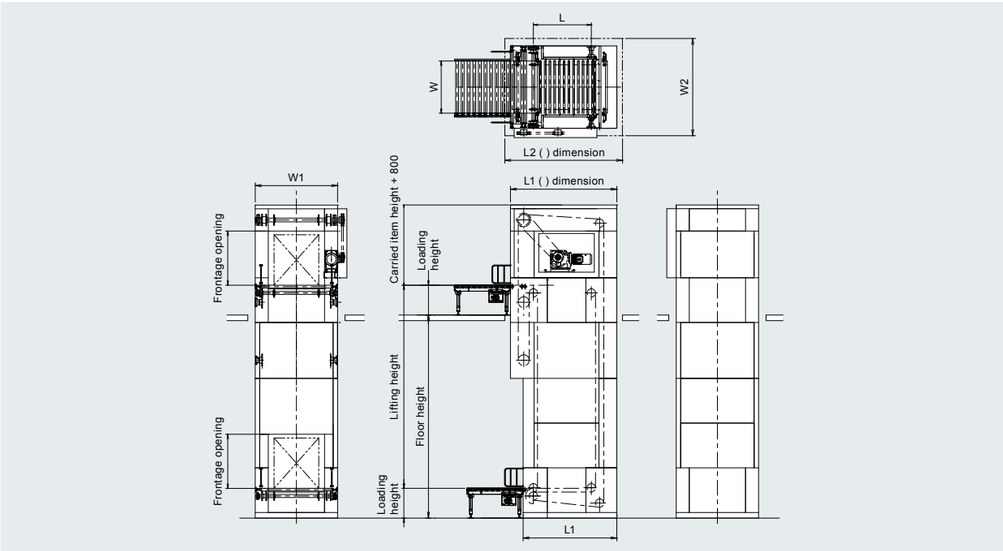

■Dimension table

(Unit: mm)

Load carrying platform dimensions		Max. item to be carried			Max. carrying capacity	Body dimensions		Floor opening dimensions		Loading height
Nominal frontage (W)	Nominal depth (L)	Width	Length	Height	Load (kg)	Width (W1)	Depth (L1)	Width (W2)	Depth (L2)	Min. dimension
1300	1430	1100	1100	1500	1000	2110	2400（2740）	2500	2600（3000）	700
	1620		1300				2590（2930）		2800（3200）	
1500	1430	1300	1100			2310	2400（2740）	2700	2600（3000）	
	1620		1300				2590（2930）		2800（3200）	

*The maximum carrying capacity is a value indicated by a distributed load. Consult us because it differs depending on the condition.
*The numbers in the ( ) of the body and the opening indicate the dimension of the MPC model.
*The above dimensions may be changed.

MPZ-1500 MPC-1500 Vertical conveyor

Continuous conveyance | Maximum transport load 1,500 kg

Carries things vertically and continuously in a small space between two fixed points. Many variations are available depending on the size of the items to be carried. High-level conveyance of maximum transport capacity of 150 (100)/hour, which is the feature of the vertical conveyor (continuous conveyance), is realized.

Control panel
(The signal tower is available as option.)

■ Specifications

(Unit: mm)

Model	MPZ-1500	MPC-1500
Direction of conveyance	Z type (type with entrance and exit on front and back)	C type (type with entrance and exit on the same surface)
Drive system	Chain drive (#140)	
Movable load	Max 1,500 kg/slat (specified in dimension table)	
Lifting height	Max 15000	
Loading height	Min 800	
Nominal frontage (W)	1300W 1500W	
Nominal depth (L)	1560L 1650L	
Transport velocity	10/12m/min (50/60Hz)	
Motor output	7.5kW 11kW 15kW	
Power supply	220 VAC (three phase) × 60 Hz 200 VAC (three phase) × 50 Hz	
Control power	Standard: 24 VDC Option: 200 VAC (single phase), 100 VAC	
Exterior	Standard: steel sheet Option: PET resin, expand metal	
Paint color	Major green S31-513 (Japan Paint Manufacturers Association Standard Paint Colors) Close to Munsell symbol 2.5G 6/3	
Safety device	Stop failure detection PH, loading check PH, delivery detection, optional devices (product height detection PH, fall detection PH)	
Separate estimate	Loading conveyor, fire shutter, control panel, operation panel, electric wiring work inside machine	

Model indication

M P Z - 1500 - 1000 - 1300 - 1560 - 10 - 11

- M: Type — P: Pallet conveyor
- P: Direction of conveyance — C: Type with entrance and exit on the same surface; Z: Type with entrance and exit on front and back
- 1500: Withstand load Max1500kg
- 1000: Lifting height (mm)
- 1300: Nominal frontage (mm)
- 1560: Nominal depth (mm)
- 10: Transport velocity (m/min)
- 11: Motor capacity (kW)

*Please note that the transport capacity differs depending on various factors.

MAKITECH DRIVEN CONVEYOR

MPZ-1500 model

(Unit: mm)

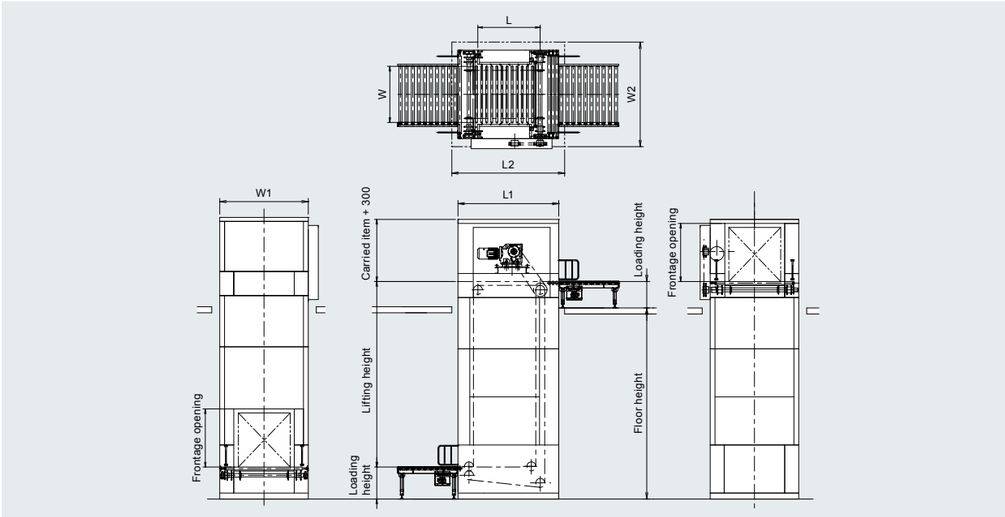

MPC-1500 model

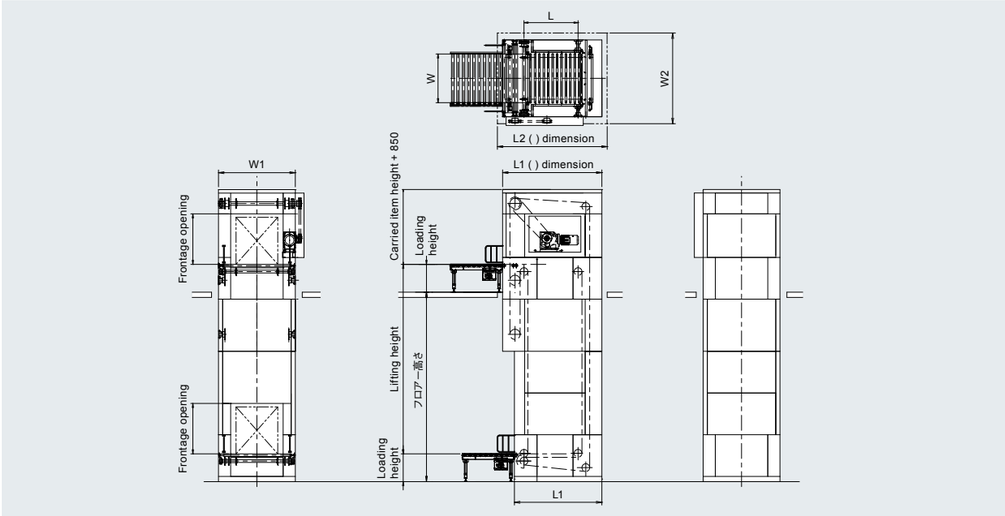

■Dimension table

(Unit: mm)

Load carrying platform dimensions		Max. item to be carried			Max. carrying capacity	Body dimensions		Floor opening dimensions		Loading height
Nominal frontage (W)	Nominal depth (L)	Width	Length	Height	Load (kg)	Width (W1)	Depth (L1)	Width (W2)	Depth (L2)	Min. dimension
1300	1560	1100	1200	1500	1500	2400	2700 (3210)	2800	3000 (3500)	800
	1650		1300				2790 (3300)		3100 (3600)	
1500	1560	1300	1200			2600	2700 (3210)	3000	3000 (3500)	
	1650		1300				2790 (3300)		3100 (3600)	

*The maximum carrying capacity is a value indicated by a distributed load. Consult us because it differs depending on the condition.
*The numbers in the ( ) of the body and the opening indicate the dimension of the MPC model.
*The above dimensions may be changed.

MCPZ-12 MCPC-12 Vertical conveyor

Continuous conveyance **Maximum transport load 12 kg**

No-oil-supply is realized by adopting Makitech's unique plastic plate chain and plastic chain.
Eco-friendly and clean conveyance is also realized by employing a plastic sprocket.
The weight and energy consumption are greatly reduced by making the slat and the main chain plastic.

Patent being applied

PlaSlat®

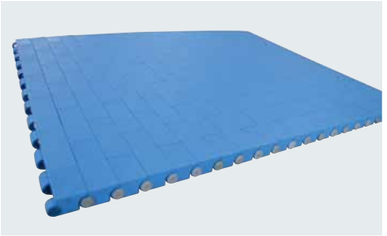

Slat: plastic suitable for food
(connecting shaft is SUS304)

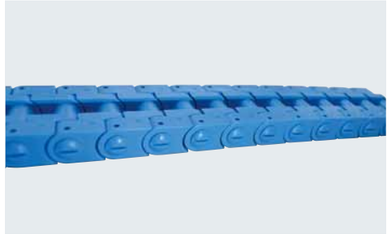

Main chain: plastic suitable for food
(connecting pin is SUS304)

■ Specifications

(Unit: mm)

Model	MCPZ-12	MCPC-12
Direction of conveyance	Z type (type with entrance and exit on front and back)	C type (type with entrance and exit on the same surface)
Drive system	Plastic chain #60 (connecting pin is SUS304)	
Slat	Plastic #80 (connecting shaft is SUS304)	
Movable load	Max 12 kg/slat	
Lifting height (mm)	Max 3500	
Loading height (mm)	Min 450	
Slat width	456W 608W	
Slat length	514L 591L 705L	
Transport velocity	5m/min ～ 30m/min	
Motor output	0.4kW 0.75kW	
Power supply	220 VAC (three phase) × 60 Hz 200 VAC (three phase) × 50 Hz	
Control power	Standard: 24 VDC Option: 200 VAC (single phase), 100 VAC	
Exterior	Standard: PET resin	
Body	Aluminum, stainless steel, iron	
Safety device	Stop failure detection PH, loading check PH, delivery detection, optional devices (product height detection PH, fall detection PH)	
Separate estimate	Loading conveyor, fire shutter, control panel, operation panel, electric wiring work inside machine	

*A stainless steel frame type that can be washed with water can also be made.

Clean environment type continuous vertical conveyor

MAKITECH DRIVEN CONVEYOR

MCPZ-12

(Unit: mm)

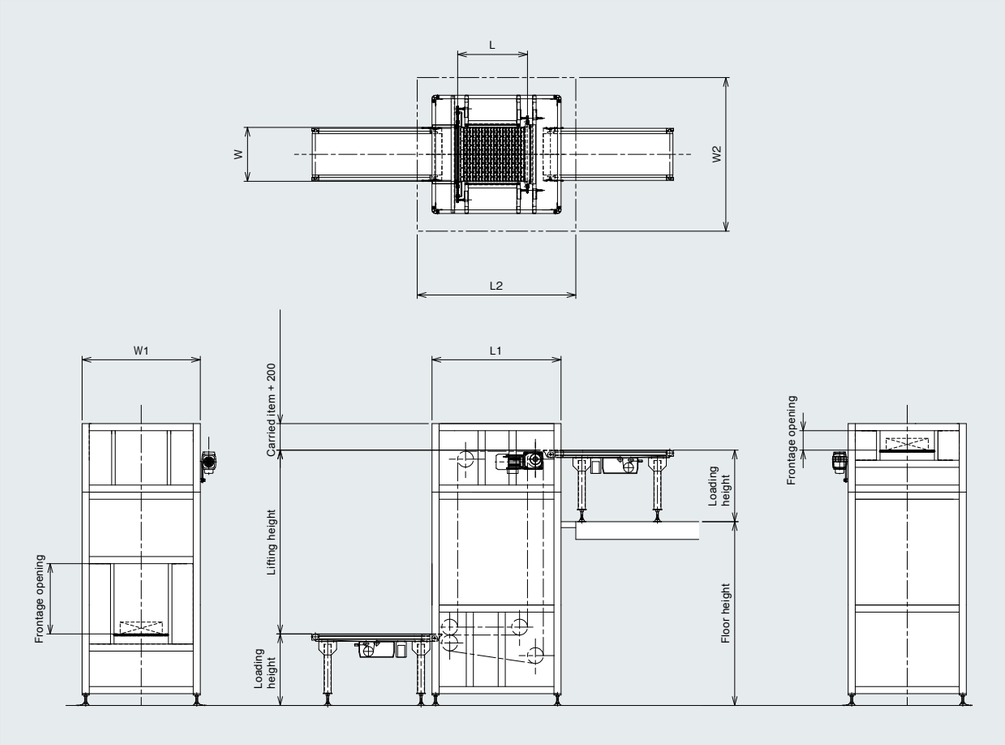

MCPC-12

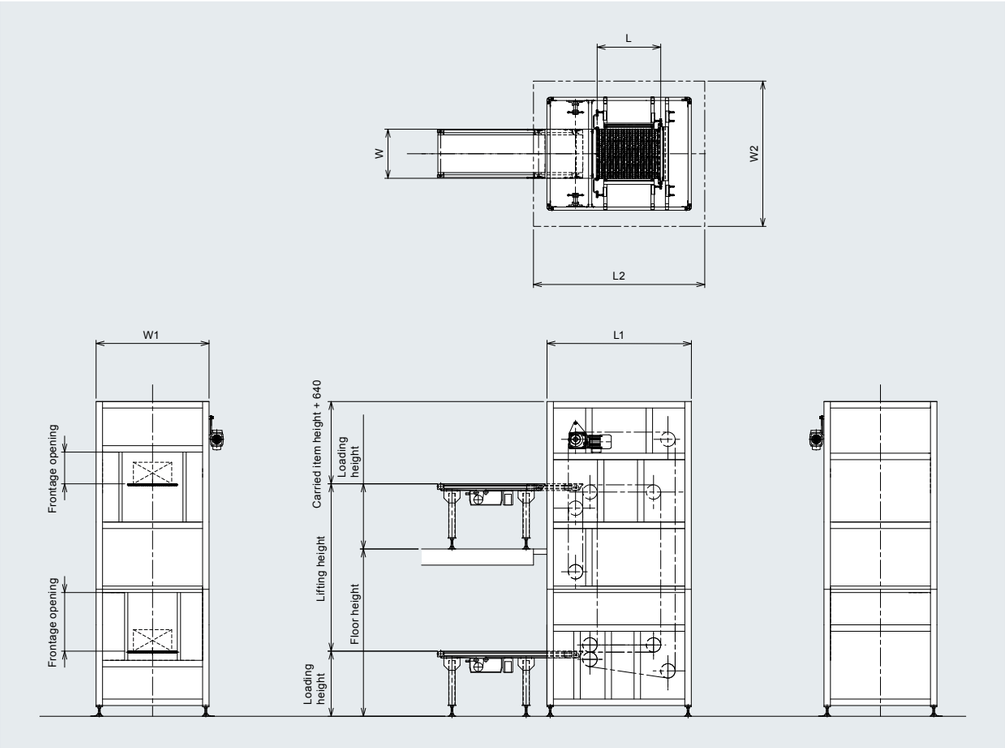

BEL Vertical lifter

Aluminum | Medium weight model | Maximum transport load 50 kg

A lifting conveyor for vertical conveyance of light weight things.
It can be used for designing a three-dimensional conveyor line.

(Unit: mm)

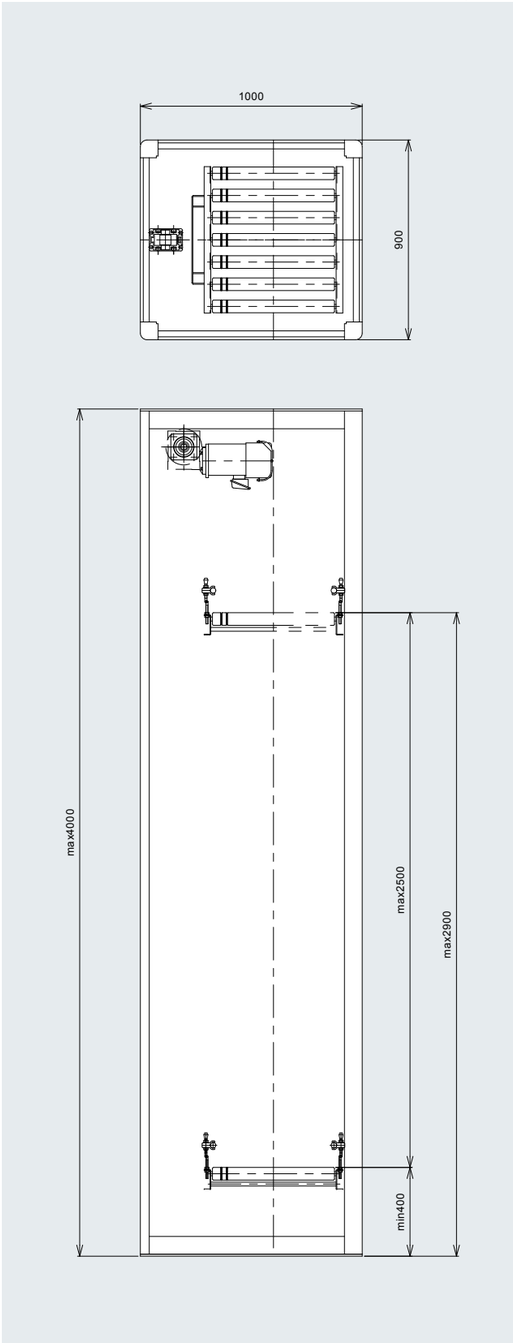

■ Specifications

(Unit: mm)

Model	BEL
Drive system	Chain drive #50
Lifting height (H2)	2,500（400～2,900）
Minimum height (H1)	400
Lifting velocity (m/min)	max 30
Motor output (kW)	0.75 kW equipped with brake
Transport capacity (kg)	max 50
Max. item to be carried	max 500W×600L×500H
Min. item to be carried	min 300W×300L×30H
Conveyor model	SST-57D equipped with brake
Power	200 VAC (three phase)

*Contact us for other available specifications besides the standard.

MAKITECH DRIVEN CONVEYOR

JEL Vertical lifter

Steel | Medium weight model | Maximum transport load 50 kg

A stable and simple lifter for vertical conveyance. It is optimum for lifting light weight things.

(Unit: mm)

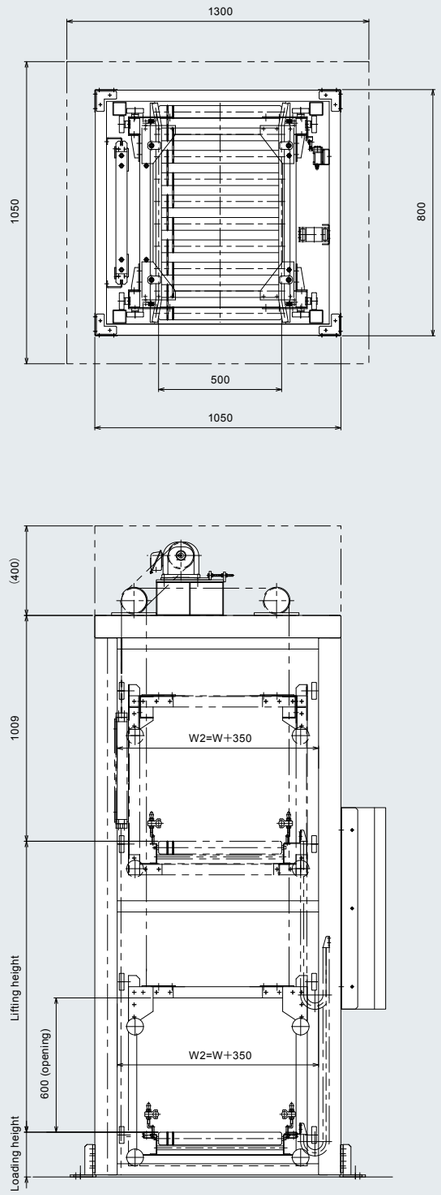

■ Specifications

(Unit: mm)

Model	JEL
Drive system	Chain drive #50
Lifting height (H2)	max 4,000
Minimum height (H1)	200
Lifting velocity (m/min)	max 40
Motor output (kW)	0.4 0.55 0.75 1.5 2.2
Transport capacity (kg)	max 50
Max. item to be carried	500W×600L×500H
Min. item to be carried	300W×300L×30H
Conveyor model	SST-57D equipped with brake
Power	200 VAC (three phase)

*Contact us for other available specifications besides the standard.
*An iron plate cover can also be made.
*The blue numbers indicate the sub standardsubstandard specification.

JEL-200 Vertical lifter

Steel | Medium weight model | Maximum transport load 200 kg

A stable and simple lifter for vertical conveyance.
Carried items of up to 200 kg can be lifted to a height of 9 m at maximum.

(Unit: mm)

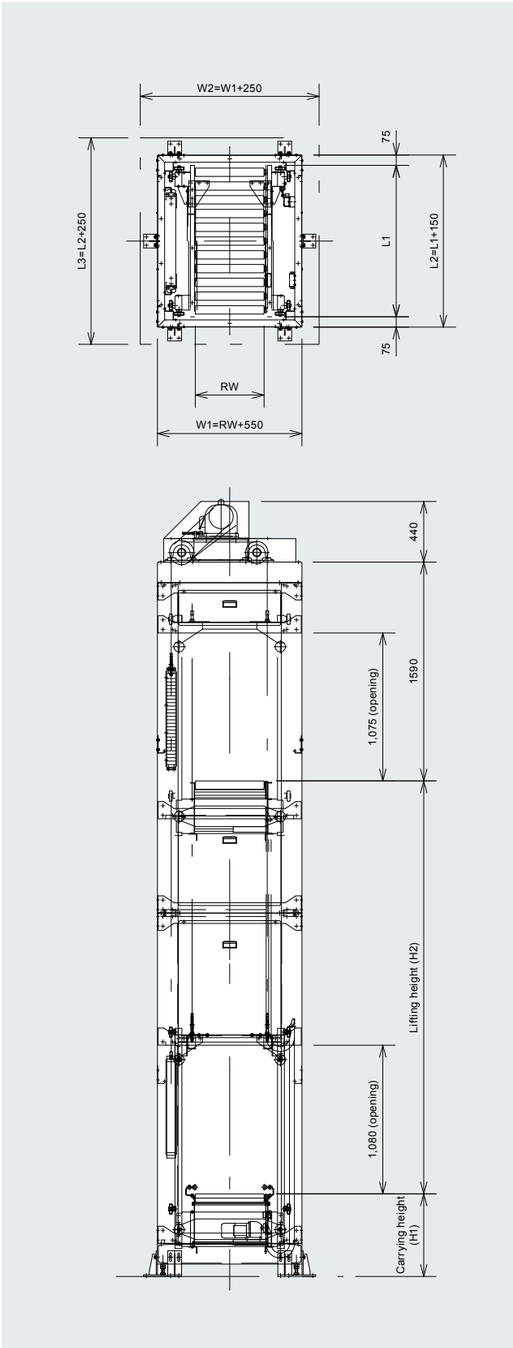

■ Specifications

(Unit: mm)

Model	JEL-200
Drive system	Chain drive (#60)
Transport capacity (kg)	Max 200kg
Lifting height (H2)	3000～9000
Minimum height (H1)	600
Lifting velocity (m/min)	10・20・30・40m/min
Motor output (kW)	0.75kW 1.5kW 2.2kW
Roller width (RW)	500RW～800RW
Machine length (L1)	1100L～1200L
Max. item to be carried	800W×1000L×1000H
Min. item to be carried	300W×400L×30H
Conveyor model	KR-604010S (equipped with brake)
Power	200 VAC (three phase)

*An aluminum frame type can also be made.
*Contact us for other available specifications besides the standard.

MAKITECH DRIVEN CONVEYOR

JEL-500 JEL-1000 Vertical lifter

Steel | Maximum transport load 500 kg | Maximum transport load 1,000 kg

A stable and simple lifter for vertical conveyance.
Carried items of up to 500/1,000 kg can be lifted to a height of 9 m at maximum.

JEL-500

(Unit: mm)

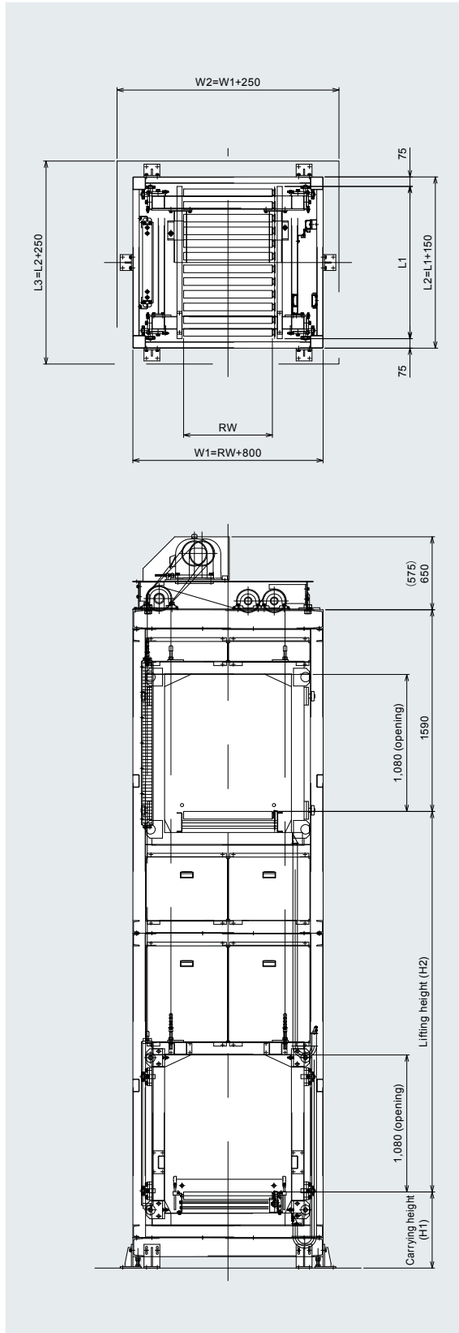

■ Specifications

(Unit: mm)

Model	JEL-500	JEL-1000
Drive system	Chain drive (#80)	Chain drive (#100)
Lifting height (H2)	3000～9000	3000～9000
Minimum height (H1)	600	600
Lifting velocity (m/min)	6・10・20・33m/min	6・9・18m/min
Motor output (kw)	1.5kW 2.2kW 3.7kW 5.5kW	2.2kW 3.7kW 5.5kW
Transport capacity (kg)	Max 500kg	Max 1000kg
Roller width (RW)	700RW～1100RW	800RW～1000RW
Machine length (L1)	1200L～1400L	1200L～1400L
Max. item to be carried	Max 1100W× 1200L×1000H	Max 1300W× 1300L×1000H
Min. item to be carried	min 500W×500L×150H	min 500W×500L×150H
Conveyor model	Roller & chain	Roller & chain
Power	200 VAC (three phase)	200 VAC (three phase)

*Consult us for other lifting speed and lifting height besides the standard.
*It also supports high speed types by servo motor drive.

MAX-T Table Lifter

MAX-T

Table Lifter

CONTENTS

High-quality lifter produced by Kyushu plant!

The MAX-T series supports various requests.

The X pantograph-type lifter of Makitech!

MAX-TH Hydraulic lifter

•Movable load 300kg	TH1-0306A / 0312A	P122
•Movable load 500kg	TH1-0506A / 0508A	P123
	TH1-0512A	P124
•Movable load 700kg	TH1-0706A	P124
•Movable load 1,000kg	TH1-1004C / 1006A	P125
	1006B / 1008A	P126
	1008B / 1012A	P127
	1012B	P128
•Movable load 1,500kg	THD1-1504A	P128
	TH1-1504C / THD1-1509A	P129
	THD1-1510A / 1512A	P130
•Movable load 2,000kg	TH1-2004A / 2004C	P131
	THD1-2009A / 2010A	P132
	2012A / 2015A	P133
•Movable load 3,000kg	THD1-3012A / 3015A	P134
•Movable load 500kg, two-stage	TH2-0512A / 0516A	P135
•Movable load 1,000kg, two-stage	TH2-1012A / 1016A	P136
•Q&A		P137
•MAX-TH optional parts		P138

The core series of the MAX-T series, and there are 1,836 types of variations.

Types with a movable load of 1,000 kg or below are developed focusing on the compact design, and types with a movable load of 1,500 kg or above are developed focusing on the heavy duty (firm and strong).
They can also be delivered quickly.

MAX-THL Hydraulic low floor lifter

•Movable load 500kg	THL-0506	P140
•Movable load 1,000kg	THL-1006	P141

MAX-TS Conductive table lifter

•Movable load 500kg / 1,000kg	MAX-TS	P142～

MAX-T series

Table lifters with various functions that support a wide range of many industry needs and contribute to power-saving and labor-saving.

Safety Speedy Valuable

Technology Transport Total

MERITS

01

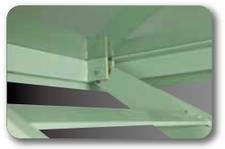

Arm fixing part

The upper and lower frames and the arms are firmly connected by metal fittings and pins.

02

Table surface

The way the table is fixed is changed from the welded structure to flat head screws. This enabled supporting three types of tables and tables with special dimensions.

03

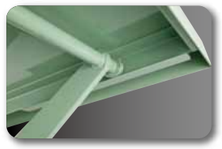

Roller guide part

This secures the accurate trajectory of the roller and prevents it from jumping up by the table impact.

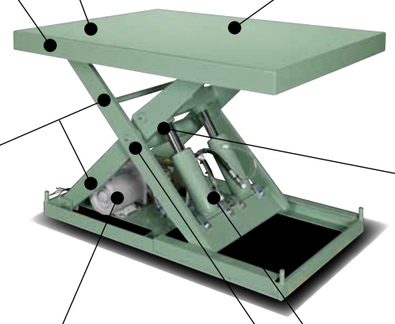

04

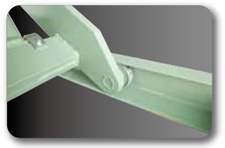

Roller part

The conventional push method (roller without bearing) is improved to the ISO standard bearing method. This secures smooth lifting.

05

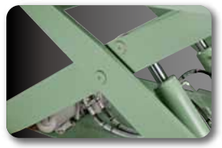

Arm part

The joint part of each arm is pinned, and it is easy to replace the metal bush or disassemble/assemble the arm.

06

Unit part

The low floor type is realized by adopting a hydraulic unit of the first class manufacturer in Japan. Deterioration caused by the bending of the hydraulic hose when the table moves up and down is reduced by changing the cylinder part. Two-speed two-voltage is also advantageous.

07

Grease nipple

A grease nipple is provided to all the pins of all the models as standard. This allows easy maintenance for filling grease.

08

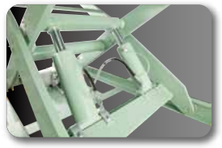

Cylinder part

A compact cylinder is realized by changing the position of it to the side where the arm moves.

DATA Model indication

MAX-T series	Number of stages		Movable load	Stroke	Frame size	Special model
TH(D)※	1	-	03	06	A	X

*(D) indicates the old model. No notation indicates the current model.

MAX-T series	Number of stages	Movable load	Stroke	Frame size	Special model
Hydraulic lifter	(D) 1=One stage	03= 300kg	04= 400mm	A=Standard	No symbol indicates standard
	(D) 2=Two stages	05= 500kg	06= 600mm	B=Wide type	X=Special model
		07= 700kg	08= 845mm	C=Horizontal type	
		10=1,000kg	09= 900mm	*No notation when the frame size is changed.	
		15=1,500kg	10=1,000mm		
		20=2,000kg	12=1,200mm or 12=1,250mm		
		30=3,000kg			
			15=1,500mm		
			16=1,600mm		

	Table size		Rising speed		Paint color		Switch
-	01	-	L	-	MG	-	F

Table size	Rising speed	Paint color	Switch
01=Small	H=High	MG = Major Green S31-513 (Japan Paint Manufacturers Association Standard Paint Colors) Close to Munsell 2.5G6/3	F=Foot switch
02=Medium	L=Low	BL = Blue S45-837 (Japan Paint Manufacturers Association Standard Paint Colors) Close to Munsell 2.5PB3.5/10	B=Two-point push button switch
03=Large	No symbol indicates special specification (see pages 138 and 139)	GR = Gray N-50 (Japan Paint Manufacturers Association Standard Paint Colors) Munsell N-5.0	No symbol indicates delivery by lead wire
No symbol indicates special specification (see pages 138 and 139)		No symbol indicates specified color (see pages 138 and 139)	

	Solenoid		Optional parts
-	200	-	□□□

Solenoid valve voltage	Optional parts
Standard is 200 V	See pages 138 and 139
AC100V=100	*Voltage change is optional.
DC24V=24	

FEATURE Four features of MAX-TH

Feature 1

Three sizes of table

A table can be selected from three sizes with respect to one frame.

Feature 2

Two types of rising speeds

The rising speed can be selected in accordance with the work.
All the models have the unit built in.

Feature 3

Three standard colors

The (three) standard colors of the conveyors are adopted as the standard colors of the series with the connection of our conveyors in consideration.

● Sample of standard colors

MG: Major Green Close to Munsell 2.5G6/3	BL: Blue S45-837 (Japan Paint Manufacturers Association Standard Paint Colors) Close to Munsell 2.5PB3.5/10	GR: Gray Munsell N-5.0

*Please note that the color of the actual product may be different because of the way it is printed.

Feature 4

Various optional parts

Bellow attachment

and

Conveyor attachment

and other parts can be used in combination.

See pages 138 and 139 for other optional parts.

SIZE Standard/common specifications

Power supply

200 VAC, three-phase, 50/60 Hz

Hydraulic oil

Standard: JXTG SUPER HYRANDO SE 32
(equivalent to ISO viscosity VG32)

Please designate the oil separately for cold weather specifications.

Standard colors

1. Munsell symbol 2.5G6/3 (approximate color)
2. Munsell symbol 5PB3.5/10 (approximate)
3. Munsell symbol N-5.0

Grease

Standard: Showa Shell Sekiyu
Alvania grease No.2 or equivalent product

Please designate the grease separately for cold weather specifications and centralized oiling.

Power cord

Standard: 3 m (including wiring inside machine)

Grease nipple

A grease nipple is provided to the drive pins of all the MAX-TH series as standard.

The centralized oiling block, which makes the periodic oiling easy, can also be attached as option.

Switch

1. Foot switch
2. Two-point push button switch
3. Delivery by lead wire

*When the customer controls the table lifter, the lead wire of the motor and the electromagnetic valve will be delivered.

Foot switch
(The cover is available as option.)

Two-point push button switch
(The stand etc. is available as option.)

Hydraulic unit components

① Oil tank
② O-ring
③ Suction filter
④ Pump
⑤ Valve body
⑥ Electromagnetic valve
⑦ Relief valve
⑧ Flow control valve
⑨ Check valve
⑩ Motor
⑪ Name plate label
⑫ Air breather and fuel filler opening

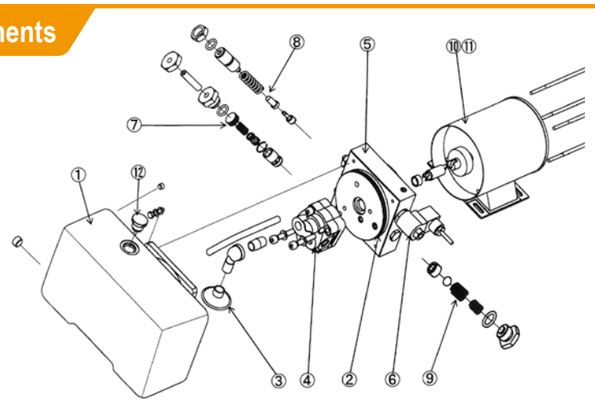

Standard electrical diagram

Standard electrical diagram (three-phase, 200 VAC)

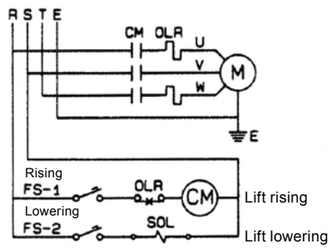

Standard hydraulic system diagram

1. Motor
2. Pump
3. Check valve
4. Throttle valve
5. Electromagnetic check valve
6. Relief valve
7. Tank
8. Suction filter
9. Cylinder

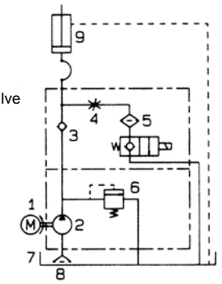

FEATURE How to use MAX-TH maintenance bar

■For medium loads

Maintenance bar having an FB plate thickness of the lower frame that supports 12 mm (rough standard: 1-t type)

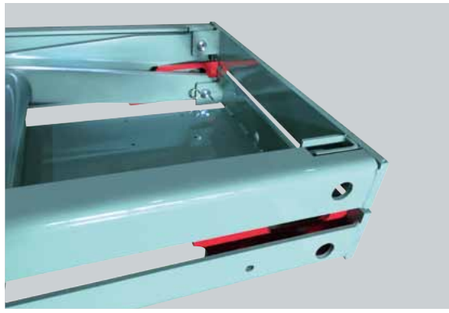

When stored

The bar is stored in the lower frame end surface (side where the arm is fixed). It is stored by hooking it to the outside of the arm fixing metal fittings on the lower frame end surface.

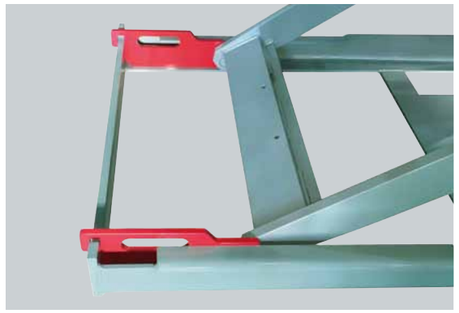

When in use

The bar is hooked on the lower frame end surface where the roller runs, and the semicircle part of the maintenance bar body comes into contact with the clearance between the outer arm and the roller when in use (it is fixed at two positions on the right and left).

■For heavy loads

Maintenance bar having an FB plate thickness of the lower frame that supports 19 mm (rough standard: 1.5-t type)

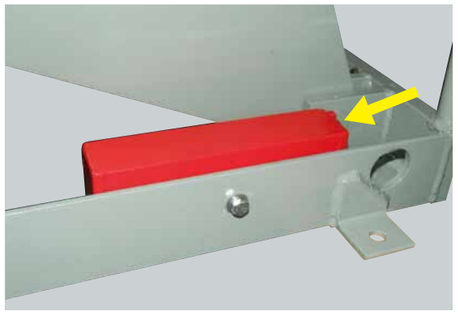

When stored

The bar is stored in the lower frame side surface by the mounting hole (Φ 10 drilled hole) on the side where the arm is fixed. The maintenance bar is fixed with M8 bolts from the outside of the lower frame.

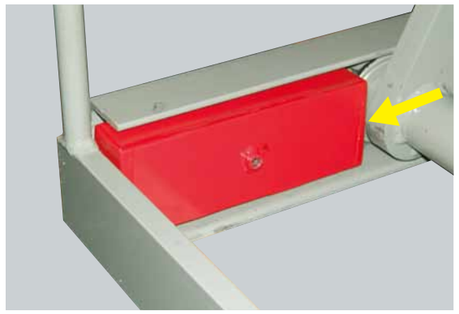

When in use

The bar is put between the lower frame and the wheel of the sliding part of the outer arm. There are two positions on the right and left. The L-shaped plate bending side comes to the outside, facing the arm sliding part.

Operating environment of MAX-TH

Number of lifting: 200 times/day (rough standard) or below
Operating temperature: Room temperature
Surrounding environment: No high humidity, salt, water, etc.

< Precautions for continuous operation/intermittent operation >

When one cycle of the operation time (the time from the rising movement to the next rising movement) is 5 minutes or less, the frequency of the movement increases.
Please be careful with the surface temperature of the motor and the heat generation of the hydraulic oil.

Rough standard for operating temperature limit:
80°C (motor surface temperature) / 70°C (hydraulic oil temperature)

A pin part and a hydraulic unit with high-frequency specifications are available as option for customers who wish to use the MAX-TH series frequently or in environments besides the above. Contact our Sales Department for details.

Table lifter

■ List of specifications of one-stage models by frame

Specifications / Model	Max. carrying capacity(kg)	Stroke (mm)	Table dimensions 01 size (mm)	Base plate dimensions (mm)	Minimum height (mm)	Maximum height (mm)	Cylinder (Ø×number of pieces)	Cylinder stroke		Rising speed	Rising time rough standard (st/sec) 50Hz	60Hz	Motor (kW)	Unit model	Pump	Tank (liter)	Necessary oil amount	Body weight
TH1-0306A	300kg	600	600×1,050	570×1,000	150	750	Ø70×1	120st		LOW	18	15	0.55	5-1-1 140	PA1	1.3	0.46	149
										HIGH	10	8	0.55	5-2-1 140	PA2			
TH1-0312A	300kg	1,200	700×1,710	680×1,690	165	1,365	Ø70×1	230st		LOW	34	29	0.55	5-1-1 140	PA1	1.3	0.88	240
										HIGH	18	15	0.55	5-2-1 140	PA2			
TH1-0506A	500kg	600	600×1,050	570×1,000	150	750	Ø70×1	120st		LOW	18	15	0.55	5-1-1 140	PA1	1.3	0.46	162
										HIGH	10	8	0.55	5-2-1 140	PA2			
TH1-0508A	500kg	845	610×1,360	570×1,198	155	1,000	Ø70×1	150st		LOW	23	19	0.55	5-1-1 140	PA1	1.3	0.57	193
										HIGH	12	10	0.55	5-2-1 140	PA2			
TH1-0512A	500kg	1,250	720×2,000	700×1,856	200	1,450	Ø80×1	230st		LOW	24	20	0.7	7-2-3 140	PA2	3	1.16	346
										HIGH	16	13	1.13	11-3-3 140	PA3			
TH1-0706A	700kg	600	600×1,050	570×1,000	155	755	Ø80×1	120st		LOW	23	20	0.55	5-1-1 140	PA1	1.3	0.60	180
										HIGH	12	10	0.55	5-2-1 140	PA2			
TH1-1004C	1,000kg	450	900× 850	880× 830	150	600	Ø80×2	90st		LOW	35	29	0.55	5-1-1 140	PA1	1.3	0.90	200
										HIGH	18	15	0.55	5-2-1 140	PA2			
TH1-1006A	1,000kg	600	600×1,050	570×1,000	155	755	Ø70×2	120st		LOW	36	30	0.55	5-1-1 140	PA1	1.3	0.92	199
										HIGH	19	16	0.55	5-2-1 140	PA2			
TH1-1006B	1,000kg	600	900×1,050	800×1,000	155	755	Ø70×2	120st		LOW	36	30	0.55	5-1-1 140	PA1	1.3	0.92	212
										HIGH	19	16	0.55	5-2-1 140	PA2			
TH1-1008A	1,000kg	845	610×1,360	570×1,198	155	1,000	Ø70×2	150st		LOW	45	38	0.55	5-1-1 140	PA1	1.3	1.15	215
										HIGH	24	20	0.55	5-2-1 140	PA2			
TH1-1008B	1,000kg	845	900×1,360	800×1,198	155	1,000	Ø70×2	150st		LOW	45	38	0.55	5-1-1 140	PA1	1.3	1.15	240
										HIGH	24	20	0.55	5-2-1 140	PA2			
TH1-1012A	1,000kg	1,250	800×2,000	700×1,856	200	1,450	Ø70×2	230st		LOW	36	30	0.7	7-2-3 140	PA2	3	1.77	364
										HIGH	24	20	1.13	11-3-3 140	PA3			
TH1-1012B	1,000kg	1,250	1,100×2,000	1,000×1,856	200	1,450	Ø70×2	230st		LOW	36	30	0.7	7-2-3 140	PA2	3	1.77	406
										HIGH	24	20	1.13	11-3-3 140	PA3			
THD1-1504A	1,500kg	400	650×1,000	610× 975	220	620	Ø90×1	100st		LOW	25	21	0.55	5-1-1 140	PA1	1.3	0.64	250
										HIGH	13	11	0.55	5-2-1 140	PA2			
TH1-1504C	1,500kg	400	900× 850	830× 814	220	620	Ø80×2	90st		LOW	35	30	0.55	5-1-1 140	PA1	1.3	0.90	255
										HIGH	19	16	0.55	5-2-1 140	PA2			
THD1-1509A	1,500kg	900	620×1,620	600×1,475	220	1,120	Ø80×2	190st		LOW	39	33	0.7	7-2-3 140	PA2	3	1.91	356
										HIGH	26	22	1.13	11-3-3 140	PA3			
THD1-1510A	1,500kg	1,000	900×1,500	850×1,475	220	1,220	Ø80×2	190st		LOW	39	33	0.7	7-2-3 140	PA2	3	1.91	441
										HIGH	26	22	1.13	11-3-3 140	PA3			
THD1-1512A	1,500kg	1,250	800×2,000	700×1,856	220	1,470	Ø80×2	230st		LOW	47	39	0.7	7-2-3 140	PA2	3	2.31	471
										HIGH	32	27	1.13	11-3-3 140	PA3			
TH1-2004A	2,000kg	400	800×1,100	750× 975	220	620	Ø80×2	90st		LOW	35	30	0.55	5-1-1 140	PA1	1.3	0.90	301
										HIGH	19	16	0.55	5-2-1 140	PA2			
TH1-2004C	2,000kg	400	900× 850	830× 814	220	620	Ø80×2	90st		LOW	35	30	0.55	5-1-1 140	PA1	1.3	0.90	241
										HIGH	19	16	0.55	5-2-1 140	PA2			
THD1-2009A	2,000kg	900	620×1,620	600×1,475	220	1,120	Ø90×2	190st		LOW	49	41	0.7	7-2-3 140	PA2	3	2.42	374
										HIGH	33	28	1.13	11-3-3 140	PA3			
THD1-2010A	2,000kg	1,000	900×1,500	850×1,475	220	1,220	Ø90×2	190st		LOW	49	41	0.7	7-2-3 140	PA2	3	2.42	441
										HIGH	33	28	1.13	11-3-3 140	PA3			
THD1-2012A	2,000kg	1,250	1,000×2,000	700×1,856	220	1,470	Ø90×2	230st		LOW	60	50	0.7	7-2-3 140	PA2	3	2.92	511
										HIGH	40	34	1.13	11-3-3 140	PA3			
THD1-2015A	2,000kg	1,500	1,120×2,400	1,100×2,300	300	1,800	Ø90×2	275st		LOW	48	40	1.13	11-3-6 140	PA3	6	3.50	823
										HIGH	24	20	2.2	22-5-6 140	PA5			
THD1-3012A	3,000kg	1,250	1,000×2,000	850×1,962	270	1,520	Ø110×2	230st		LOW	60	50	1.13	11-3-6 140	PA3	6	4.37	696
										HIGH	30	25	2.2	22-5-6 140	PA5			
THD1-3015A	3,000kg	1,500	1,200×2,400	1,100×2,300	300	1,800	Ø110×2	275st		LOW	72	60	1.13	11-3-6 140	PA3	6	5.22	933
										HIGH	36	30	2.2	22-5-6 140	PA5			

*The body weight is the rough standard for the wet type (when hydraulic oil is filled) that is assembled normally.

■ List of specifications of two-stage models by frame

TH2-0512A	500kg	1,200	600×1,050	570×1,000	250	1,450	Ø70×1	230st		LOW	34	29	0.55	5-1-1 140	PA1	1.3	0.88	246
										HIGH	18	15	0.55	5-2-1 140	PA2			
TH2-0516A	500kg	1,600	610×1,360	570×1,198	250	1,850	Ø70×1	350st		LOW	28	23	0.7	7-2-3 140	PA2	3	1.35	286
										HIGH	18	15	1.13	11-3-3 140	PA3			
TH2-1012A	1,000kg	1,200	600×1,050	570×1,000	250	1,450	Ø90×1	230st		LOW	30	25	0.7	7-2-3 140	PA2	3	1.46	249
										HIGH	20	17	1.13	11-3-3 140	PA3			
TH2-1016A	1,000kg	1,600	610×1,360	570×1,198	250	1,850	Ø90×1	350st		LOW	46	38	0.7	7-2-3 140	PA2	3	2.23	291
										HIGH	30	25	1.13	11-3-3 140	PA3			

■ List of specifications of low floor models

THL-0506	500kg	600	600×1,050	570×1,020	77	677	Ø50×1	120st		LOW	9	8	0.55	5-1-1 140	PA1	1.3	0.24	170
										HIGH	5	4	0.55	5-2-1 140	PA2			
THL-1006	1,000kg	600	600×1,050	570×1,020	78	678	Ø50×2	120st		LOW	18	15	0.55	5-1-1 140	PA1	1.3	0.47	185
										HIGH	10	8	0.55	5-2-1 140	PA2			

TH1-0306A

Movable load: 300 kg **Stroke: 600 mm**

*The picture is an image.

DATA Standard specifications

Model		TH1-0306A		
Movable load		300kg		
Stroke (mm)		600		
Number of arm stages		One stage		
Minimum height (mm)		150		
Maximum height (mm)		750		
Power		A: Three-phase 200 V		
Motor output (kW)		L:0.55	H:0.55	
Rising time (sec) 50 Hz/60 Hz		18/15	10/8	
Cylinder		Ø 70 × 120 st × 1 piece		
Table dimensions (mm)	L:	1050		
	W:	01:600	02:700	03:800
Dead weight rough standard (kg)		148	150	159
Paint color	MG: major green / SG: super green / GR: gray			
Operation	F: foot switch / B: two-point push button / no notation: delivery by lead wire			

DRAWING Standard dimensions

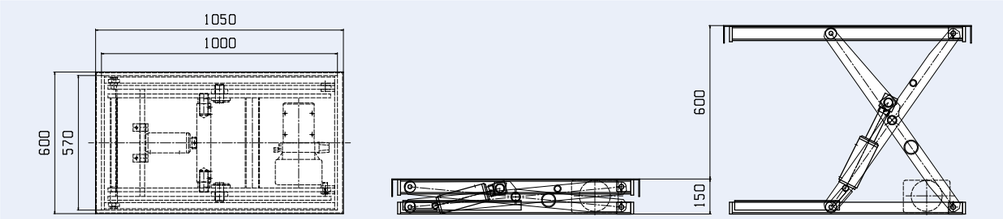

TH1-0312A

Movable load: 300 kg **Stroke: 1,200 mm**

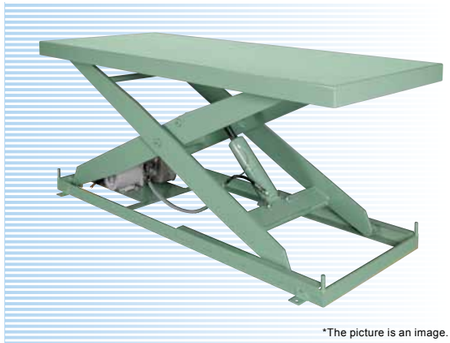

*The picture is an image.

DATA Standard specifications

Model		TH1-0312A		
Movable load		300kg		
Stroke (mm)		1200		
Number of arm stages		One stage		
Minimum height (mm)		165		
Maximum height (mm)		1365		
Power		A: Three-phase 200 V		
Motor output (kW)		L:0.55	H:0.55	
Rising time (sec) 50 Hz/60 Hz		34/29	18/15	
Cylinder		Ø 70 × 230 st × 1 piece		
Table dimensions (mm)	L:	1710		
	W:	01:700	02:800	03:900
Dead weight rough standard (kg)		240	238	256
Paint color	MG: major green / SG: super green / GR: gray			
Operation	F: foot switch / B: two-point push button / no notation: delivery by lead wire			

DRAWING Standard dimensions

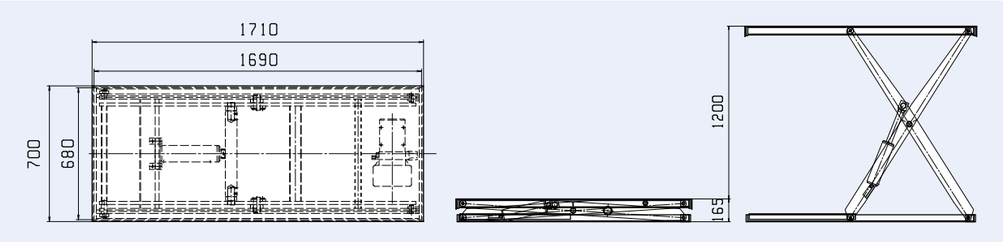

TH1-0506A

Movable load: 500 kg **Stroke: 600 mm**

*The picture is an image.

DATA Standard specifications

Model		TH1-0506A		
Movable load		500kg		
Stroke (mm)		600		
Number of arm stages		One stage		
Minimum height (mm)		150		
Maximum height (mm)		750		
Power		A: Three-phase 200 V		
Motor output (kW)		L:0.55	H:0.55	
Rising time (sec) 50 Hz/60 Hz		18/15	10/8	
Cylinder		Ø 70 × 120 st × 1 piece		
Table dimensions (mm)	L:	1050		
	W:	01:600	02:700	03:800
Dead weight rough standard (kg)		159	162	171
Paint color	MG: major green / SG: super green / GR: gray			
Operation	F: foot switch / B: two-point push button / no notation: delivery by lead wire			

DRAWING Standard dimensions

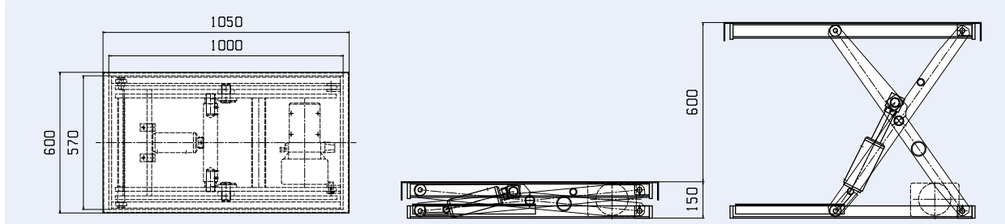

TH1-0508A

Movable load: 500 kg **Stroke: 845 mm**

*The picture is an image.

DATA Standard specifications

Model		TH1-0508A		
Movable load		500kg		
Stroke (mm)		845		
Number of arm stages		One stage		
Minimum height (mm)		155		
Maximum height (mm)		1000		
Power		A: Three-phase 200 V		
Motor output (kW)		L:0.55	H:0.55	
Rising time (sec) 50 Hz/60 Hz		23/19	12/10	
Cylinder		Ø 70 × 150 st × 1 piece		
Table dimensions (mm)	L:	1360		
	W:	01:610	02:700	03:800
Dead weight rough standard (kg)		187	193	199
Paint color	MG: major green / SG: super green / GR: gray			
Operation	F: foot switch / B: two-point push button / no notation: delivery by lead wire			

DRAWING Standard dimensions

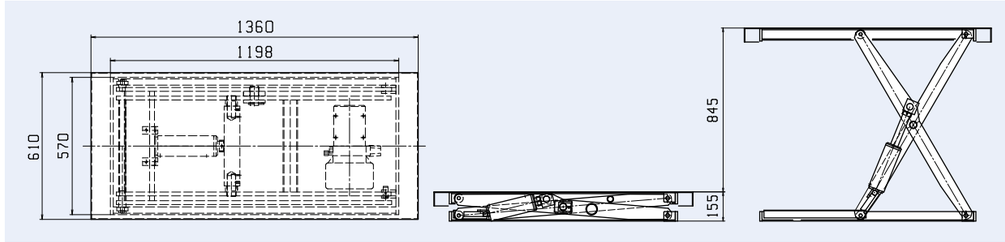

TH1-0512A

Movable load: 500 kg **Stroke: 1,250 mm**

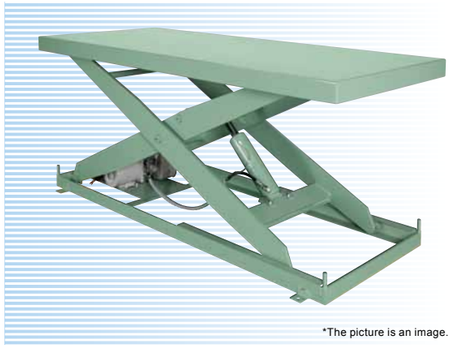

*The picture is an image.

DATA Standard specifications

Model		TH1-0512A		
Movable load		500kg		
Stroke (mm)		1250		
Number of arm stages		One stage		
Minimum height (mm)		200		
Maximum height (mm)		1450		
Power		A: Three-phase 200 V		
Motor output (kW)		L:0.7	H:1.13	
Rising time (sec) 50 Hz/60 Hz		24/20	16/13	
Cylinder		Ø 80 × 230 st × 1 piece		
Table dimensions (mm)	L:	2000		
	W:	01:720	02:800	03:900
Dead weight rough standard (kg)		333	344	360
Paint color	MG: major green / SG: super green / GR: gray			
Operation	F: foot switch / B: two-point push button / no notation: delivery by lead wire			

DRAWING Standard dimensions

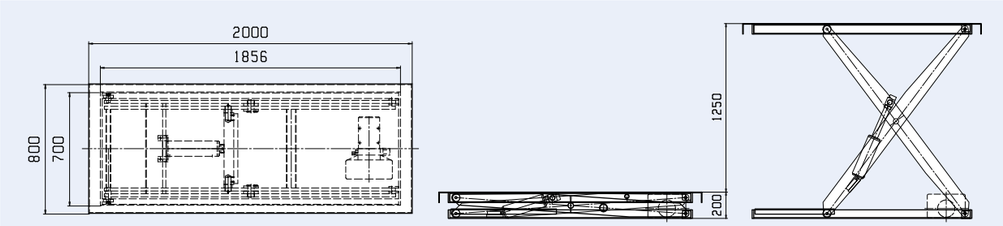

TH1-0706A

Movable load: 700 kg **Stroke: 600 mm**

*The picture is an image.

DATA Standard specifications

Model		TH1-0706A		
Movable load		700kg		
Stroke (mm)		600		
Number of arm stages		One stage		
Minimum height (mm)		155		
Maximum height (mm)		755		
Power		A: Three-phase 200 V		
Motor output (kW)		L:0.55	H:0.55	
Rising time (sec) 50 Hz/60 Hz		23/20	12/10	
Cylinder		Ø 80 × 120 st × 1 piece		
Table dimensions (mm)	L:	1050		
	W:	01:600	02:700	03:800
Dead weight rough standard (kg)		177	180	189
Paint color	MG: major green / SG: super green / GR: gray			
Operation	F: foot switch / B: two-point push button / no notation: delivery by lead wire			

DRAWING Standard dimensions

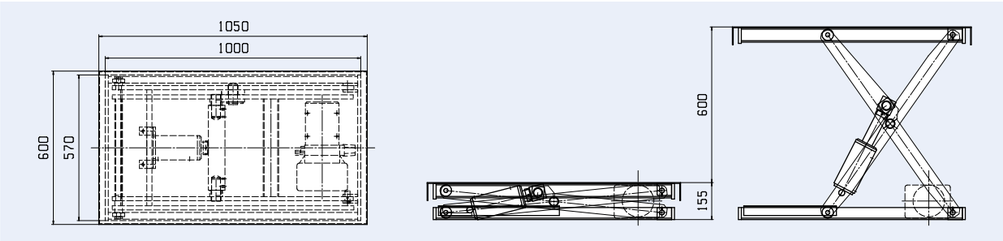

MAKITECH DRIVEN CONVEYOR

TH1-1004C

Movable load: 1,000 kg **Stroke: 450 mm**

*The picture is an image.

DATA Standard specifications

Model		TH1-1004C		
Movable load		1000kg		
Stroke (mm)		450		
Number of arm stages		One stage		
Minimum height (mm)		150		
Maximum height (mm)		600		
Power		C: Three-phase 200 V		
Motor output (kW)		L:0.55	H:0.55	
Rising time (sec) 50 Hz/60 Hz		35/29	18/15	
Cylinder		Ø 80 × 90 st × 2 pieces		
Table dimensions (mm)	L:	850		
	W:	01:900	02:1000	03:1100
Dead weight rough standard (kg)		200	206	210
Paint color	MG: major green / SG: super green / GR: gray			
Operation	F: foot switch / B: two-point push button / no notation: delivery by lead wire			

DRAWING Standard dimensions

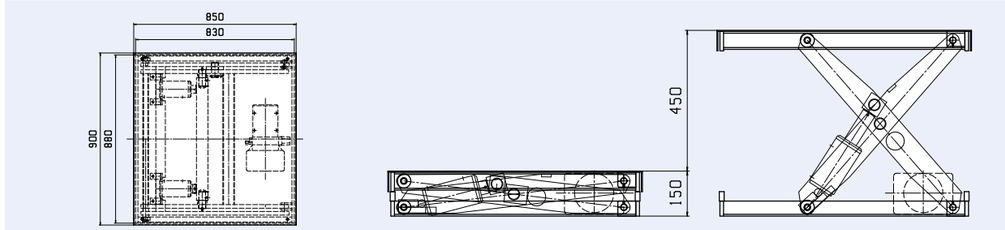

TH1-1006A

Movable load: 1,000 kg **Stroke: 600 mm**

*The picture is an image.

DATA Standard specifications

Model		TH1-1006A		
Movable load		1000kg		
Stroke (mm)		600		
Number of arm stages		One stage		
Minimum height (mm)		155		
Maximum height (mm)		755		
Power		A: Three-phase 200 V		
Motor output (kW)		L:0.55	H:0.55	
Rising time (sec) 50 Hz/60 Hz		36/30	19/16	
Cylinder		Ø 70 × 120 st × 2 piece		
Table dimensions (mm)	L:	1050		
	W:	01:600	02:700	03:800
Dead weight rough standard (kg)		196	199	208
Paint color	MG: major green / SG: super green / GR: gray			
Operation	F: foot switch / B: two-point push button / no notation: delivery by lead wire			

DRAWING Standard dimensions

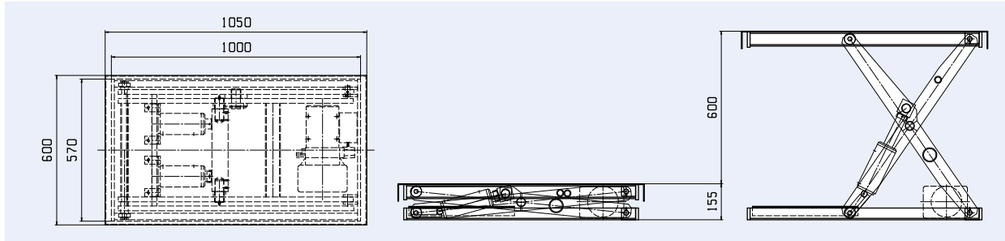

TH1-1006B

Movable load: 1,000 kg **Stroke: 600 mm**

*The picture is an image.

DATA Standard specifications

Model		TH1-1006B		
Movable load		1000kg		
Stroke (mm)		600		
Number of arm stages		One stage		
Minimum height (mm)		155		
Maximum height (mm)		755		
Power		B: Three-phase 200 V		
Motor output (kW)		L:0.55	H:0.55	
Rising time (sec) 50 Hz/60 Hz		36/30	19/16	
Cylinder		Ø 70 × 120 st × 2 pieces		
Table dimensions (mm)	L:	1050		
	W:	01:900	02:1000	03:1050
Dead weight rough standard (kg)		192	202	208
Paint color	MG: major green / SG: super green / GR: gray			
Operation	F: foot switch / B: two-point push button / no notation: delivery by lead wire			

DRAWING Standard dimensions

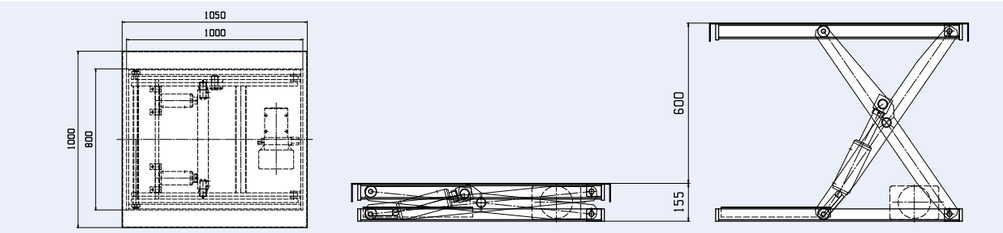

TH1-1008A

Movable load: 1,000 kg **Stroke: 845 mm**

*The picture is an image.

DATA Standard specifications

Model		TH1-1008A		
Movable load		1000kg		
Stroke (mm)		845		
Number of arm stages		One stage		
Minimum height (mm)		155		
Maximum height (mm)		1000		
Power		A: Three-phase 200 V		
Motor output (kW)		L:0.55	H:0.55	
Rising time (sec) 50 Hz/60 Hz		45/38	24/20	
Cylinder		Ø 70 × 150 st × 2 pieces		
Table dimensions (mm)	L:	1360		
	W:	01:610	02:700	03:800
Dead weight rough standard (kg)		209	215	221
Paint color	MG: major green / SG: super green / GR: gray			
Operation	F: foot switch / B: two-point push button / no notation: delivery by lead wire			

DRAWING Standard dimensions

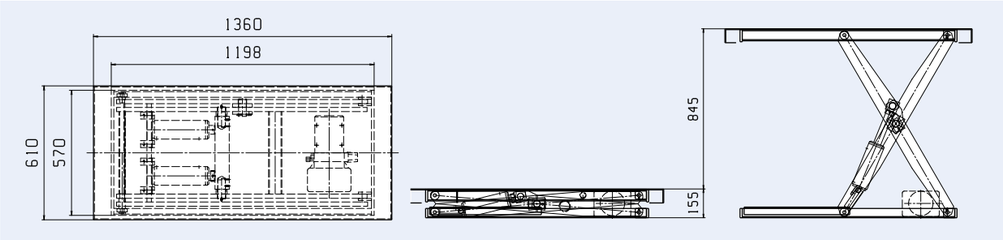

MAKITECH DRIVEN CONVEYOR

TH1-1008B

Movable load: 1,000 kg **Stroke: 845 mm**

*The picture is an image.

DATA Standard specifications

Model		TH1-1008B		
Movable load		1000kg		
Stroke (mm)		845		
Number of arm stages		One stage		
Minimum height (mm)		155		
Maximum height (mm)		1000		
Power		B: Three-phase 200 V		
Motor output (kW)		L:0.55	H:0.55	
Rising time (sec) 50 Hz/60 Hz		45/38	24/20	
Cylinder		Ø 70 × 150 st × 2 pieces		
Table dimensions (mm)	L:	1360		
	W:	01:900	02:1000	03:1100
Dead weight rough standard (kg)		224	232	240
Paint color	MG: major green / SG: super green / GR: gray			
Operation	F: foot switch / B: two-point push button / no notation: delivery by lead wire			

DRAWING Standard dimensions

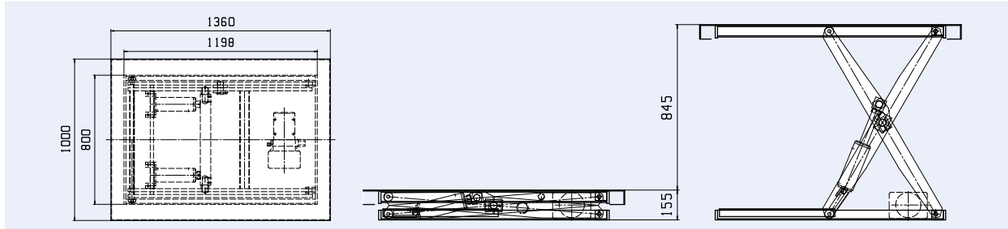

TH1-1012A

Movable load: 1,000 kg **Stroke: 1,250 mm**

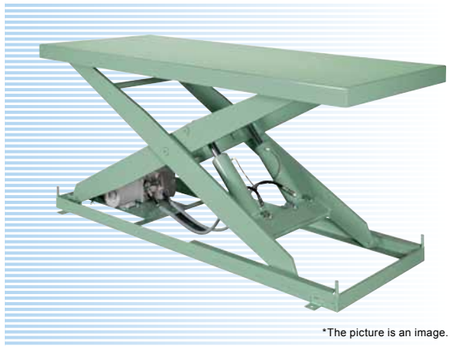

*The picture is an image.

DATA Standard specifications

Model		TH1-1012A		
Movable load		1000kg		
Stroke (mm)		1250		
Number of arm stages		One stage		
Minimum height (mm)		200		
Maximum height (mm)		1450		
Power		A: Three-phase 200 V		
Motor output (kW)		L:0.7	H:1.13	
Rising time (sec) 50 Hz/60 Hz		36/30	24/20	
Cylinder		Ø 70 × 230 st × 2 pieces		
Table dimensions (mm)	L:	2000		
	W:	01:800	02:900	03:1000
Dead weight rough standard (kg)		351	362	378
Paint color	MG: major green / SG: super green / GR: gray			
Operation	F: foot switch / B: two-point push button / no notation: delivery by lead wire			

DRAWING Standard dimensions

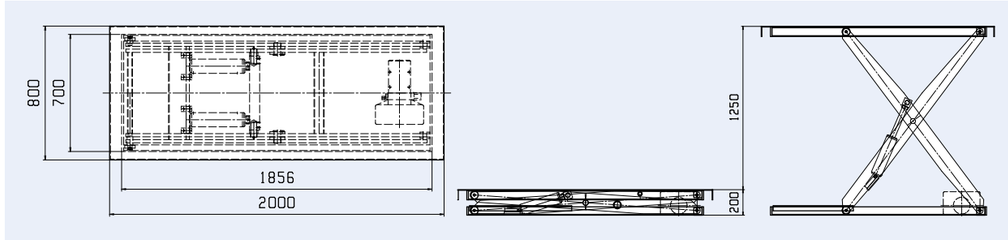

TH1-1012B

Movable load: 1,000 kg **Stroke: 1,250 mm**

*The picture is an image.

DATA Standard specifications

Model		TH1-1012B		
Movable load		1000kg		
Stroke (mm)		1250		
Number of arm stages		One stage		
Minimum height (mm)		200		
Maximum height (mm)		1450		
Power		A: Three-phase 200 V		
Motor output (kW)		L:0.7	H:1.13	
Rising time (sec) 50 Hz/60 Hz		36/30	24/20	
Cylinder		Ø 70 × 230 st × 2 pieces		
Table dimensions (mm)	L:	2000		
	W:	01:1100	02:1200	03:1300
Dead weight rough standard (kg)		383	396	404
Paint color	MG: major green / SG: super green / GR: gray			
Operation	F: foot switch / B: two-point push button / no notation: delivery by lead wire			

DRAWING Standard dimensions

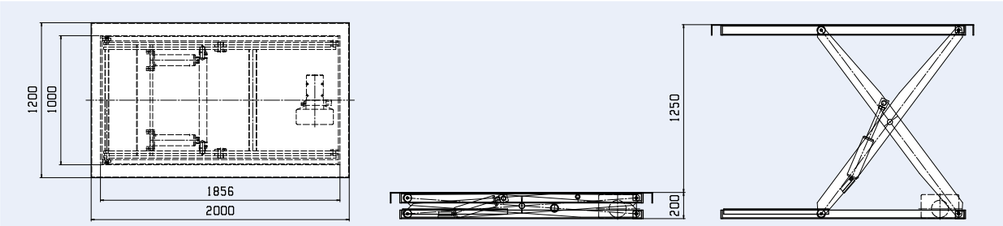

THD1-1504A

Movable load: 1,500 kg **Stroke: 400 mm**

*The picture is an image.

DATA Standard specifications

Model		THD1-1504A		
Movable load		1500kg		
Stroke (mm)		400		
Number of arm stages		One stage		
Minimum height (mm)		220		
Maximum height (mm)		620		
Power		A: Three-phase 200 V		
Motor output (kW)		L:0.55	H:0.55	
Rising time (sec) 50 Hz/60 Hz		25/21	13/11	
Cylinder		Ø 90 × 100 st × 1 piece		
Table dimensions (mm)	L:	1000		
	W:	01:650	02:750	03:850
Dead weight rough standard (kg)		248	250	259
Paint color	MG: major green / SG: super green / GR: gray			
Operation	F: foot switch / B: two-point push button / no notation: delivery by lead wire			

DRAWING Standard dimensions

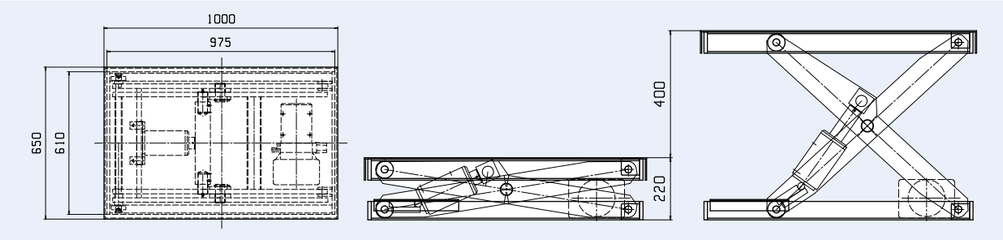

MAKITECH DRIVEN CONVEYOR

TH1-1504C

Movable load: 1,500 kg **Stroke: 400 mm**

*The picture is an image.

DATA Standard specifications

Model		TH1-1504C		
Movable load		1500kg		
Stroke (mm)		400		
Number of arm stages		One stage		
Minimum height (mm)		220		
Maximum height (mm)		620		
Power		B: Three-phase 200 V		
Motor output (kW)		L:0.55	H:0.55	
Rising time (sec) 50 Hz/60 Hz		35/30	19/16	
Cylinder		Ø 80 × 90 st × 2 pieces		
Table dimensions (mm)	L:	850		
	W:	01:900	02:1000	03:1100
Dead weight rough standard (kg)		255	266	285
Paint color	MG: major green / SG: super green / GR: gray			
Operation	F: foot switch / B: two-point push button / no notation: delivery by lead wire			

DRAWING Standard dimensions

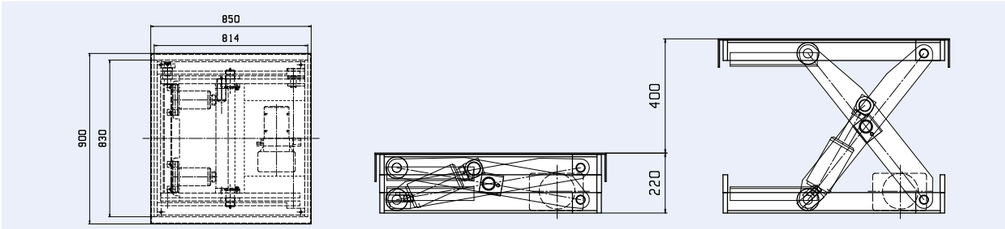

THD1-1509A

Movable load: 1,500 kg **Stroke: 900 mm**

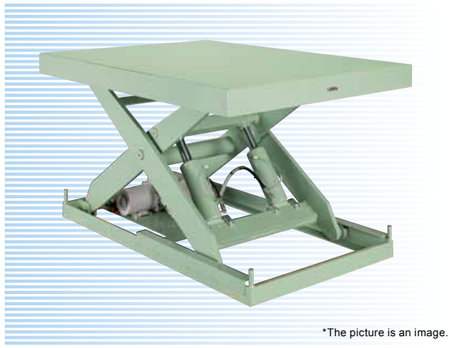

*The picture is an image.

DATA Standard specifications

Model		THD1-1509A		
Movable load		1500kg		
Stroke (mm)		900		
Number of arm stages		One stage		
Minimum height (mm)		220		
Maximum height (mm)		1120		
Power		A: Three-phase 200 V		
Motor output (kW)		L:0.7	H:1.13	
Rising time (sec) 50 Hz/60 Hz		39/33	26/22	
Cylinder		Ø 80 × 190 st × 2 pieces		
Table dimensions (mm)	L:	1620		
	W:	01:620	02:700	03:800
Dead weight rough standard (kg)		342	347	354
Paint color	MG: major green / SG: super green / GR: gray			
Operation	F: foot switch / B: two-point push button / no notation: delivery by lead wire			

DRAWING Standard dimensions

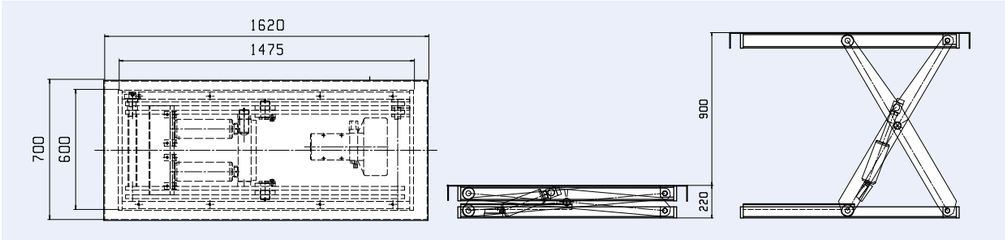

THD1-1510A

Movable load: 1,500 kg **Stroke: 1,000 mm**

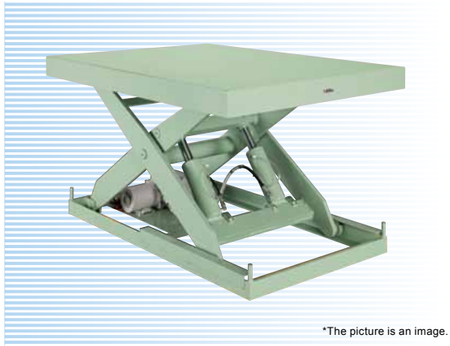

*The picture is an image.

DATA Standard specifications

Model		THD1-1510A		
Movable load		1500kg		
Stroke (mm)		1000		
Number of arm stages		One stage		
Minimum height (mm)		220		
Maximum height (mm)		1220		
Power		A: Three-phase 200 V		
Motor output (kW)		L:0.7	H:1.13	
Rising time (sec) 50 Hz/60 Hz		39/33	26/22	
Cylinder		Ø 80 × 190 st × 2 pieces		
Table dimensions (mm)	L:	1500		
	W:	01:900	02:1000	03:1100
Dead weight rough standard (kg)		429	439	448
Paint color	MG: major green / SG: super green / GR: gray			
Operation	F: foot switch / B: two-point push button / no notation: delivery by lead wire			

DRAWING Standard dimensions

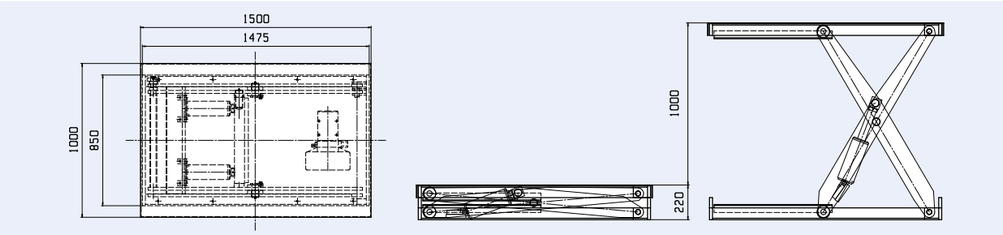

THD1-1512A

Movable load: 1,500 kg **Stroke: 1,250 mm**

*The picture is an image.

DATA Standard specifications

Model		THD1-1512A		
Movable load		1500kg		
Stroke (mm)		1250		
Number of arm stages		One stage		
Minimum height (mm)		220		
Maximum height (mm)		1470		
Power		A: Three-phase 200 V		
Motor output (kW)		L:0.7	H:1.13	
Rising time (sec) 50 Hz/60 Hz		47/39	32/27	
Cylinder		Ø 80 × 230 st × 2 pieces		
Table dimensions (mm)	L:	2000		
	W:	01:800	02:900	03:1000
Dead weight rough standard (kg)		441	453	469
Paint color	MG: major green / SG: super green / GR: gray			
Operation	F: foot switch / B: two-point push button / no notation: delivery by lead wire			

DRAWING Standard dimensions

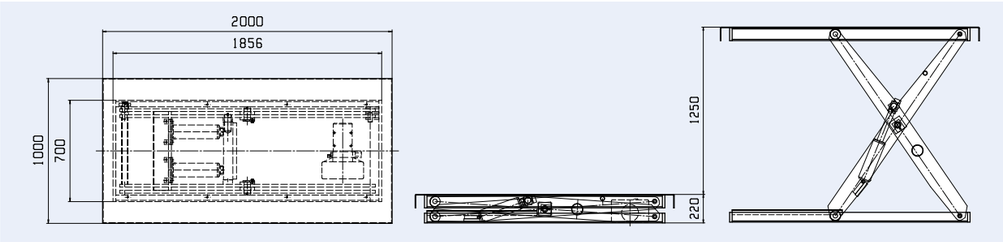

MAKITECH DRIVEN CONVEYOR

TH1-2004A

Movable load: 2,000 kg **Stroke: 400 mm**

*The picture is an image.

DATA Standard specifications

Model		TH1-2004A		
Movable load		2000kg		
Stroke (mm)		400		
Number of arm stages		One stage		
Minimum height (mm)		220		
Maximum height (mm)		620		
Power		A: Three-phase 200 V		
Motor output (kW)		L:0.55	H:0.55	
Rising time (sec) 50 Hz/60 Hz		35/30	19/16	
Cylinder		Ø 80 × 90 st × 2 pieces		
Table dimensions (mm)	L:	1100		
	W:	01:800	02:900	03:1000
Dead weight rough standard (kg)		295	299	302
Paint color	MG: major green / SG: super green / GR: gray			
Operation	F: foot switch / B: two-point push button / no notation: delivery by lead wire			

DRAWING Standard dimensions

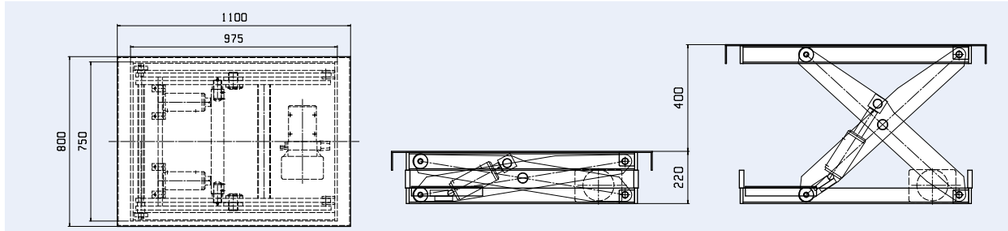

TH1-2004C

Movable load: 2,000 kg **Stroke: 400 mm**

*The picture is an image.

DATA Standard specifications

Model		TH1-2004C		
Movable load		2000kg		
Stroke (mm)		400		
Number of arm stages		One stage		
Minimum height (mm)		220		
Maximum height (mm)		620		
Power		A: Three-phase 200 V		
Motor output (kW)		L:0.55	H:0.55	
Rising time (sec) 50 Hz/60 Hz		35/30	19/16	
Cylinder		Ø 80 × 90 st × 2 pieces		
Table dimensions (mm)	L:	850		
	W:	01:900	02:1000	03:1100
Dead weight rough standard (kg)		239	250	269
Paint color	MG: major green / SG: super green / GR: gray			
Operation	F: foot switch / B: two-point push button / no notation: delivery by lead wire			

DRAWING Standard dimensions

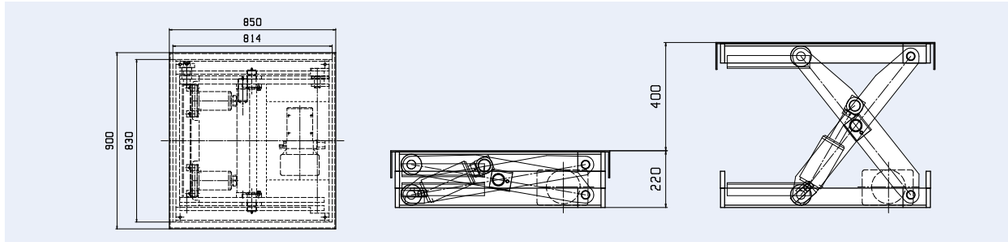

THD1-2009A

Movable load: 2,000 kg **Stroke: 900 mm**

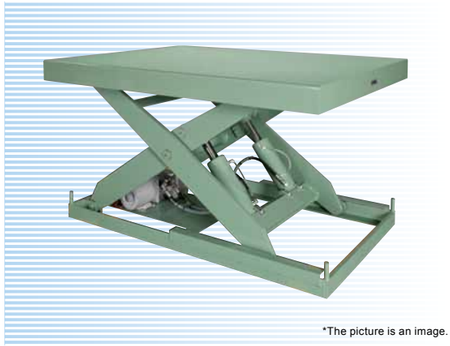

*The picture is an image.

DATA Standard specifications

Model		THD1-2009A		
Movable load		2000kg		
Stroke (mm)		900		
Number of arm stages		One stage		
Minimum height (mm)		220		
Maximum height (mm)		1120		
Power		A: Three-phase 200 V		
Motor output (kW)		L:0.7	H:1.13	
Rising time (sec) 50 Hz/60 Hz		49/41	33/28	
Cylinder		Ø 90 × 190 st × 2 pieces		
Table dimensions (mm)	L:	1620		
	W:	01:620	02:700	03:800
Dead weight rough standard (kg)		360	365	372
Paint color	MG: major green / SG: super green / GR: gray			
Operation	F: foot switch / B: two-point push button / no notation: delivery by lead wire			

DRAWING Standard dimensions

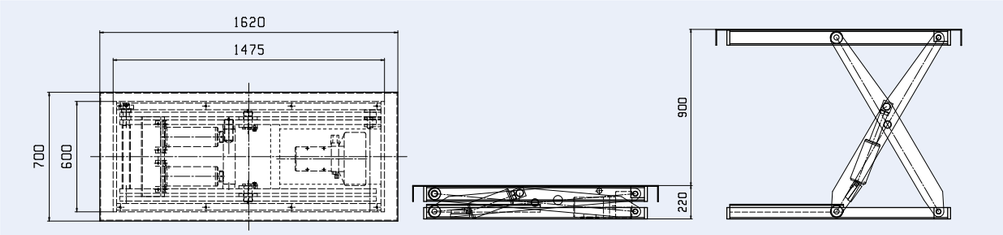

THD1-2010A

Movable load: 2,000 kg **Stroke: 1,000 mm**

*The picture is an image.

DATA Standard specifications

Model		THD1-2010A		
Movable load		2000kg		
Stroke (mm)		1000		
Number of arm stages		One stage		
Minimum height (mm)		220		
Maximum height (mm)		1220		
Power		A: Three-phase 200 V		
Motor output (kW)		L:0.7	H:1.13	
Rising time (sec) 50 Hz/60 Hz		49/41	33/28	
Cylinder		Ø 90 × 190 st × 2 pieces		
Table dimensions (mm)	L:	1500		
	W:	01:900	02:1000	03:1100
Dead weight rough standard (kg)		429	439	448
Paint color	MG: major green / SG: super green / GR: gray			
Operation	F: foot switch / B: two-point push button / no notation: delivery by lead wire			

DRAWING Standard dimensions

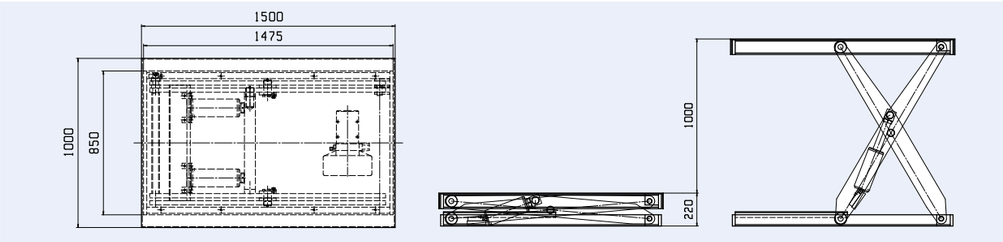

THD1-2012A

Movable load: 2,000 kg **Stroke: 1,250 mm**

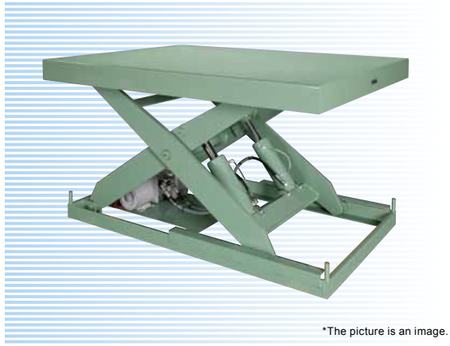

*The picture is an image.

DATA Standard specifications

Model		THD1-2012A		
Movable load		2000kg		
Stroke (mm)		1250		
Number of arm stages		One stage		
Minimum height (mm)		220		
Maximum height (mm)		1470		
Power		A: Three-phase 200 V		
Motor output (kW)		L:0.7	H:1.13	
Rising time (sec) 50 Hz/60 Hz		60/50	40/34	
Cylinder		Ø 90 × 230 st × 2 pieces		
Table dimensions (mm)	L:	2000		
	W:	01:800	02:900	03:1000
Dead weight rough standard (kg)		481	493	509
Paint color	MG: major green / SG: super green / GR: gray			
Operation	F: foot switch / B: two-point push button / no notation: delivery by lead wire			

DRAWING Standard dimensions

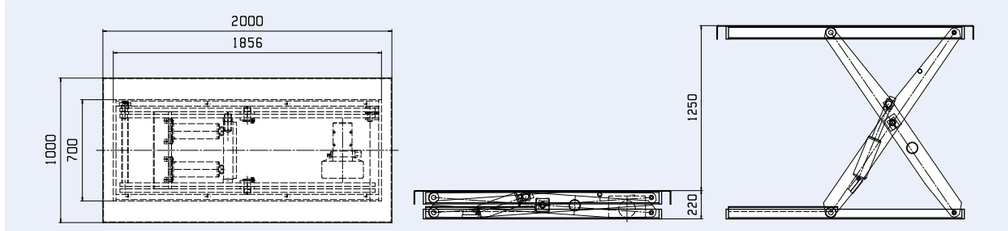

THD1-2015A

Movable load: 2,000 kg **Stroke: 1,500 mm**

*The picture is an image.

DATA Standard specifications

Model		THD1-2015A		
Movable load		2000kg		
Stroke (mm)		1500		
Number of arm stages		One stage		
Minimum height (mm)		300		
Maximum height (mm)		1800		
Power		A: Three-phase 200 V		
Motor output (kW)		L:1.13	H:2.2	
Rising time (sec) 50 Hz/60 Hz		48/40	24/20	
Cylinder		Ø 90 × 275 st × 2 pieces		
Table dimensions (mm)	L:	2400		
	W:	01:1120	02:1200	03:1300
Dead weight rough standard (kg)		794	813	833
Paint color	MG: major green / SG: super green / GR: gray			
Operation	F: foot switch / B: two-point push button / no notation: delivery by lead wire			

DRAWING Standard dimensions

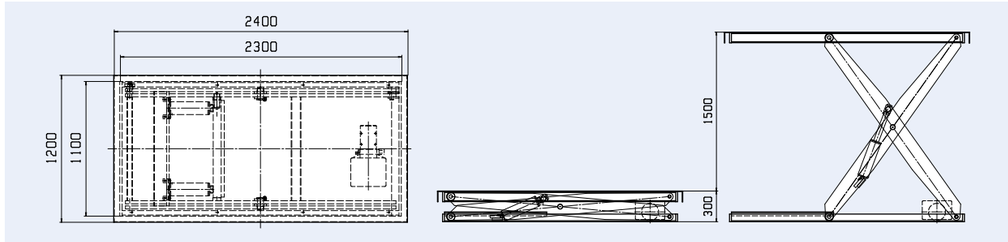

THD1-3012A

Movable load: 3,000 kg **Stroke: 1,250 mm**

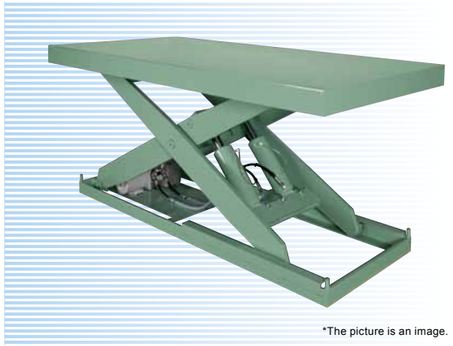

*The picture is an image.

DATA Standard specifications

Model		THD1-3012A		
Movable load		3000kg		
Stroke (mm)		1250		
Number of arm stages		One stage		
Minimum height (mm)		270		
Maximum height (mm)		1520		
Power		A: Three-phase 200 V		
Motor output (kW)		L:1.13	H:2.2	
Rising time (sec) 50 Hz/60 Hz		60/50	30/25	
Cylinder		Ø 110 × 230 st × 2 pieces		
Table dimensions (mm)	L:	2000		
	W:	01:900	02:1000	03:1100
Dead weight rough standard (kg)		668	686	704
Paint color	MG: major green / SG: super green / GR: gray			
Operation	F: foot switch / B: two-point push button / no notation: delivery by lead wire			

DRAWING Standard dimensions

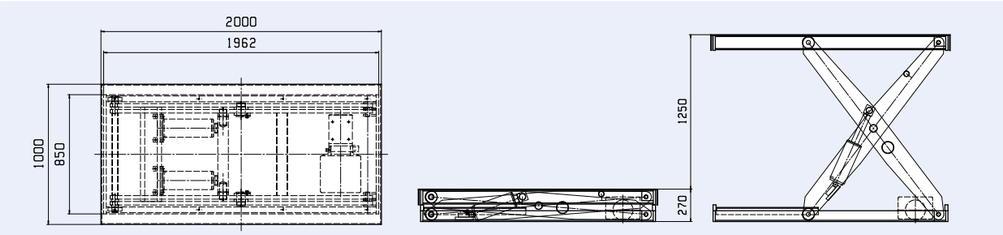

THD1-3015A

Movable load: 3,000 kg **Stroke: 1,500 mm**

*The picture is an image.

DATA Standard specifications

Model		THD1-3015A		
Movable load		3000kg		
Stroke (mm)		1500		
Number of arm stages		One stage		
Minimum height (mm)		300		
Maximum height (mm)		1800		
Power		A: Three-phase 200 V		
Motor output (kW)		L:1.13	H:2.2	
Rising time (sec) 50 Hz/60 Hz		72/60	36/30	
Cylinder		Ø 110 × 275 st × 2 pieces		
Table dimensions (mm)	L:	2400		
	W:	01:1120	02:1200	03:1300
Dead weight rough standard (kg)		904	923	943
Paint color	MG: major green / SG: super green / GR: gray			
Operation	F: foot switch / B: two-point push button / no notation: delivery by lead wire			

DRAWING Standard dimensions

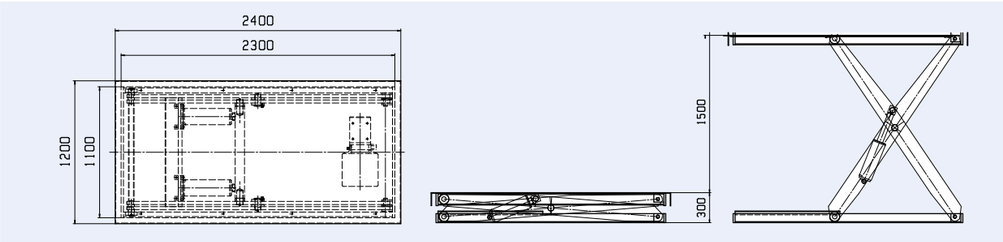

TH2-0512A

Movable load: 500 kg **Stroke: 1,200 mm**

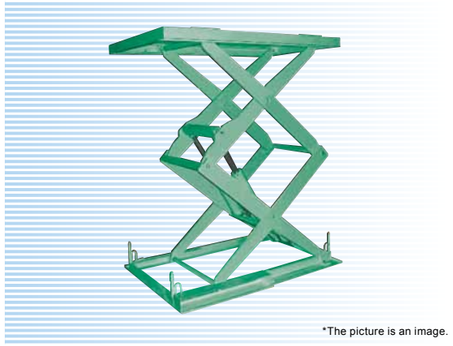

*The picture is an image.

DATA Standard specifications

Model		TH2-0512A		
Movable load		500kg		
Stroke (mm)		1200		
Number of arm stages		Two stages		
Minimum height (mm)		250		
Maximum height (mm)		1450		
Power		A: Three-phase 200 V		
Motor output (kW)		L:0.55	H:0.55	
Rising time (sec) 50 Hz/60 Hz		34/29	18/15	
Cylinder		Ø 70 × 230 st × 1 piece		
Table dimensions (mm)	L:	1050		
	W:	01:600	02:700	03:800
Dead weight rough standard (kg)		246	249	252
Paint color	MG: major green / SG: super green / GR: gray			
Operation	F: foot switch / B: two-point push button / no notation: delivery by lead wire			

DRAWING Standard dimensions

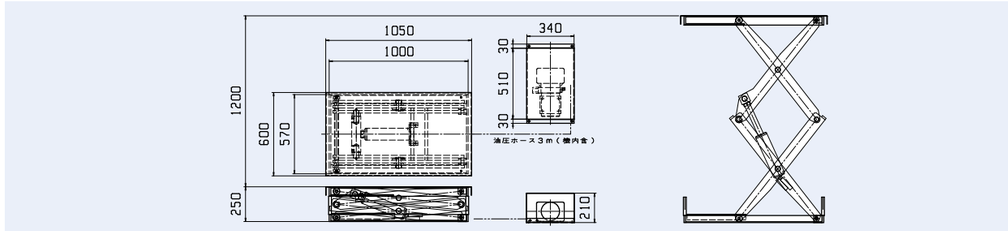

TH2-0516A

Movable load: 500 kg **Stroke: 1,600 mm**

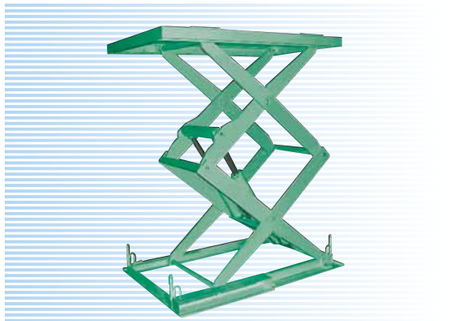

*The picture is an image.

DATA Standard specifications

Model		TH2-0516A		
Movable load		500kg		
Stroke (mm)		1600		
Number of arm stages		Two stages		
Minimum height (mm)		250		
Maximum height (mm)		1850		
Power		A: Three-phase 200 V		
Motor output (kW)		L:0.7	H:1.13	
Rising time (sec) 50 Hz/60 Hz		28/23	18/15	
Cylinder		Ø 70 × 350 st × 1 piece		
Table dimensions (mm)	L:	1360		
	W:	01:610	02:700	03:800
Dead weight rough standard (kg)		286	289	298
Paint color	MG: major green / SG: super green / GR: gray			
Operation	F: foot switch / B: two-point push button / no notation: delivery by lead wire			

DRAWING Standard dimensions

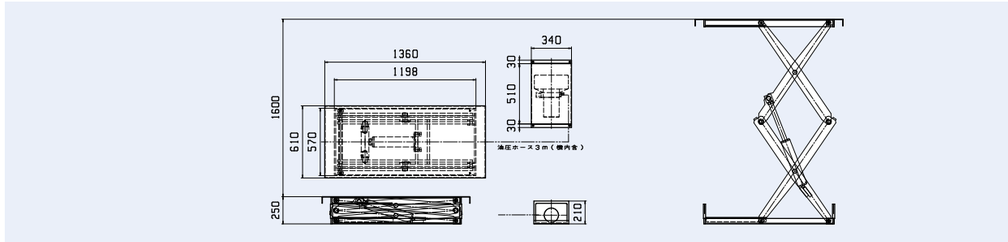

TH2-1012A

Movable load: 1,000 kg **Stroke: 1,200 mm**

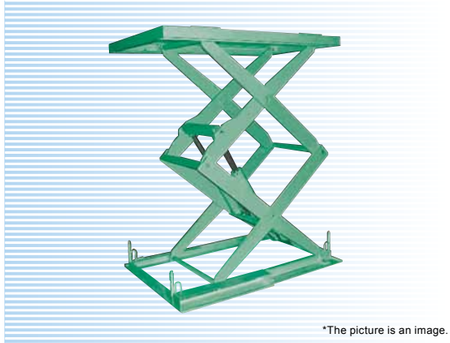

*The picture is an image.

DATA Standard specifications

Model		TH2-1012A		
Movable load		1000kg		
Stroke (mm)		1200		
Number of arm stages		Two stages		
Minimum height (mm)		250		
Maximum height (mm)		1450		
Power		A: Three-phase 200 V		
Motor output (kW)		L:0.7	H:1.13	
Rising time (sec) 50 Hz/60 Hz		30/25	20/17	
Cylinder		Ø 90 × 230 st × 1 piece		
Table dimensions (mm)	L:	1050		
	W:	01:600	02:700	03:800
Dead weight rough standard (kg)		249	252	255
Paint color	MG: major green / SG: super green / GR: gray			
Operation	F: foot switch / B: two-point push button / no notation: delivery by lead wire			

DRAWING Standard dimensions

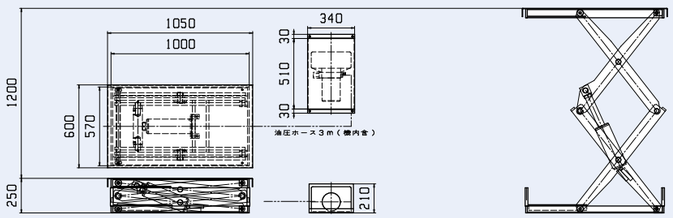

TH2-1016A

Movable load: 1,000 kg **Stroke: 1,600 mm**

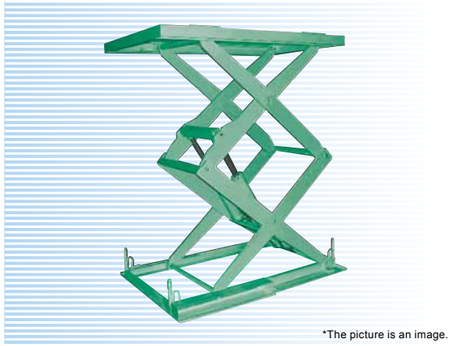

*The picture is an image.

DATA Standard specifications

Model		TH2-1016A		
Movable load		1000kg		
Stroke (mm)		1600		
Number of arm stages		Two stages		
Minimum height (mm)		250		
Maximum height (mm)		1850		
Power		A: Three-phase 200 V		
Motor output (kW)		L:0.7	H:1.13	
Rising time (sec) 50 Hz/60 Hz		46/38	30/25	
Cylinder		Ø 90 × 350 st × 1 piece		
Table dimensions (mm)	L:	1360		
	W:	01:610	02:700	03:800
Dead weight rough standard (kg)		291	294	297
Paint color	MG: major green / SG: super green / GR: gray			
Operation	F: foot switch / B: two-point push button / no notation: delivery by lead wire			

DRAWING Standard dimensions

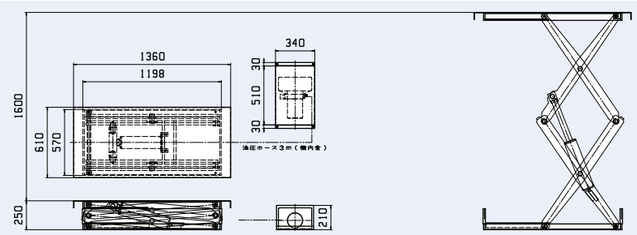

MAKITECH DRIVEN CONVEYOR

MAX-TH Hydraulic lifter — Some tips to know

Q1 How large will the stroke be with respect to the table dimensions?

A As a rough standard, the maximum stroke allows lifting of about 60% of the table L direction per one stage.The actual maximum height can be obtained by adding the minimum height to this dimension.

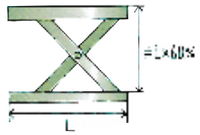

Rough standard for stroke =
number of lifter stages × dimension L of lifter stand × 0.6

Q2 How does it move?

A Rising: The oil is pumped out from the tank by the electric pump to the cylinder, and the lift rises.
Lowering: The valve of the cylinder is opened, the oil is pushed out by the dead weight of the lifter, and the lifter is lowered. The pump does not move when the lifter goes down.

Q3 Adjusting speed of lowering time

A The lowering speed can be adjusted with ⑧ Flow control valve in the "Hydraulic unit components diagram."
This valve changes the size of the path from the cylinder to the tank.
However, the lift is lowered by pushing back the cylinder by the table dead weight, and the time when the lift is pushed downward changes between cases with and without loads on the table. Note that the lowering speed becomes faster as the lifter approaches the minimum height because of the characteristic of its structure.

Q4 What is the good condition for using the lifter?

A The lifter is pushed up by the cylinder. The upward pushing force becomes the weakest when the lifter is at the minimum height because the cylinder is laid down. In terms of conditions, it is preferable to set the lifter at a higher position so that more loads will be applied. Because of the structural characteristic of the oil pressure, the lifter sinks to a certain extent. To avoid this, the work must be loaded at the minimum height.

Q5 How is the oil amount that enters the cylinder calculated?

A The oil amount is calculated by obtaining the internal volume when the cylinder is extended completely and multiplying it by the number of cylinders. The cross section area is calculated by Formula (1), and the internal volume (oil amount) is calculated by Formula (2).

Formula (1) Cross section area of cylinder = π × square of cylinder radius (cm) cm^2

Formula (2)

$$\text{Oil amount} = \frac{\text{cross section area of cylinder } (cm^2) \times \text{cylinder stroke (cm)}}{1000} \text{ liter}$$

Q6 How is the lifter rising time calculated?

A The rising time can be obtained quickly if the time it takes for the pump to discharge the oil amount necessary for the cylinder is calculated by the formula below.

$$\text{Rising time} = \frac{\text{cylinder oil amount (liter)}}{\text{pump discharge amount (liter)}} \times 60 \text{ sec}$$

For the type and discharge amount of the pumps, see the lower left part of the "List of specifications by frame."

Q7 Are there precautions and a particular direction for loading works on the lifter?

A A uniform static load is used basically; however, the hydraulic lifter is used for loading works in some cases.
The following would be the precautions.

1. The works must not be loaded from both sides of the arm.(The inclination may be 20 mm or more in some cases because of the clearance of the pantograph etc.)
2. When the loading condition is poor, load the works at the minimum height.(See Q4)
3. Make sure to set the anchors when loading works.
4. When loading works, select a model that is similar to the size of the table and the stand as much as possible.

Q8 Long time holding

A When the lifter is held for a long time, there will be a slight pressure change due to the structure of oil pressure. The height may change slightly when the lifter is held at a certain height for about half a day.
Please be aware of this when holding operation is necessary for automation lines.

OPTION Optional parts lineup for MAX-TH hydraulic lifters

Bellow attachment JBC

It prevents foreign materials from being jammed and is useful for safety measures.
The standard is a folding type made of orange nylon and attached to the outside of the table.

Table size change TBX

The table size can be changed to a desired size.
*There is restriction depending on the machine type and items to be loaded.

Rolling screen attachment RSC

It is useful for safety measures.
The surface to be attached can be designated.

Stainless steel table TBS

The table material can be changed to stainless steel.

Anchor bracket ABK

The brackets can be used for fixing the body to the floor.

Inspection hole processing (table) TBO

The inspection hole makes the maintenance and oiling of the hydraulic unit easy.

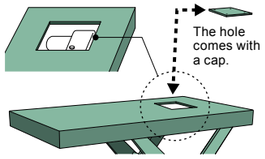

Lower limit adjustment stopper AJS

The adjustment stopper can be used to change the level of the lower end.
Please note that the shape of the stopper may change depending on the machine model.

Centralized oiling piping GPS

The oiling of the bush (pin) part is integrated to the piping block, which makes the oiling easy.

Plated type ACC

The body can be plated.
*Purchased products and some materials cannot be plated.

Stroke regulation collar SKC

A collar is put inside the cylinder to regulate the rising stroke.

Conveyor attachment SCV

High-frequency bush type BSB

The bush and the pin of each fulcrum are changed in accordance with the use frequency.

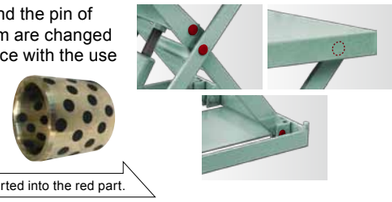

Select the parts depending on your application.

*The pictures are for reference. The shape and color may be different depending on the machine model.

Hydraulic unit extraposition (with cover) UBC

The hydraulic unit can be taken out of the machine.
Unless otherwise designated, the standard hydraulic hose will be 3 m.

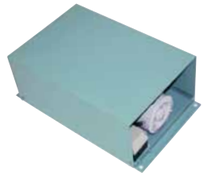

Limit switch (rising and lowering) LSU LSD

The switch is used to stop the lifter at the rising (lowering) end. It can be set arbitrarily within the stroke range of the lifter.

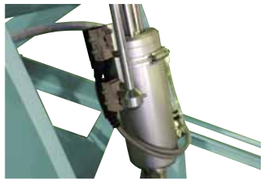

Rapid fall prevention valve DPV

The valve prevents rapid fall even if the hydraulic hose is cracked.

Stand type limit switch (LS) LSS

The switch is installed to the lifter machine side, and it easily adjusts the position.

Pressure gauge UPG

The gauge measures the pressure when the lifter goes up.
*Some models cannot have the gauge built in.

Stand for push button switch PBS

It is a stand for operating the push button switch.

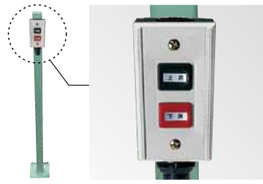

Valve for increasing stop accuracy during rising SVO

The valve increases the stop accuracy when the table rises.
*Some models cannot have the valve attached inside the hydraulic unit.

Three-point push button switch for hold operation mechanism 3HL

Once the rise (lower) button is pressed, the lifter goes up (down) to the upper end (lower end) position.It stops at an arbitrary position when the stop button is pressed during operation.Some models cannot have the magnet switch for hold operation built in.

100 VAC power IVN

The lifter can operate at 100 VAC by using an inverter for transformation.
*Some models are not compatible.

Foot switch cover FSC

The cover protects the foot switch and prevents it from being operated wrong.

Hydraulic unit tank size change UTC

The tank size of the hydraulic unit can be changed to 1 L, 3 L, or 6 L.
*Some models cannot have the tank attached inside the machine.

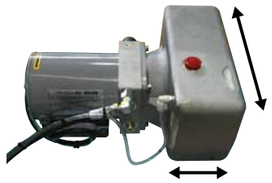

There are various other optional parts.
Feel free to contact us.

MAX-THL series Hydraulic low floor lifter

Allowable movable load:
500kg / 1000kg

Rising distance:
600mm

It greatly enhances the conventional work efficiency such as the work station of conveyors and rising/lowering (stacking/destacking) of carts.

SELECT How to select a model

THL 05 – 06 L – MG – F

- THL: MAX-THL series
- 05: Movable load 05 = 500kg, 10 = 1000kg
- 06: Stroke 06 = 600mm
- L: Rising speed H = High, L = Low
- MG: Paint color MG = Major Green, SG = Super green, GR = Gray
- F: Switch F = Foot switch, B = Two-point push button switch, No symbol indicates delivery by lead wire

MAKITECH DRIVEN CONVEYOR

THL-0506

Movable load: 500 kg **Stroke: 600 mm**

DRAWING Standard dimensions

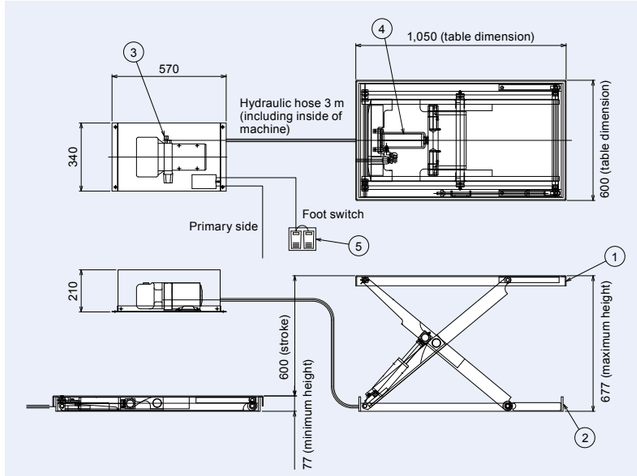

DATA Standard specifications

Model		THL-0506	
Movable load		500kg	
Stroke (mm)		600	
Number of arm stages		One stage	
Minimum height (mm)		77	
Maximum height (mm)		677	
Power		Three-phase 200 V	
Motor output (kW)		L:0.55	H:0.55
Rising time (sec) 50 Hz/60 Hz		9/8	5/4
Cylinder		Ø 50 × 120 st × 1 piece	
Table dimensions (mm)	L:	1050	
	W:	600	
Dead weight rough standard (kg)		170	

NAME Name

① Table	④ Cylinder
② Base frame	⑤ Foot switch
③ Hydraulic unit	

THL-1006

Movable load: 1,000 kg **Stroke: 600 mm**

DRAWING Standard dimensions

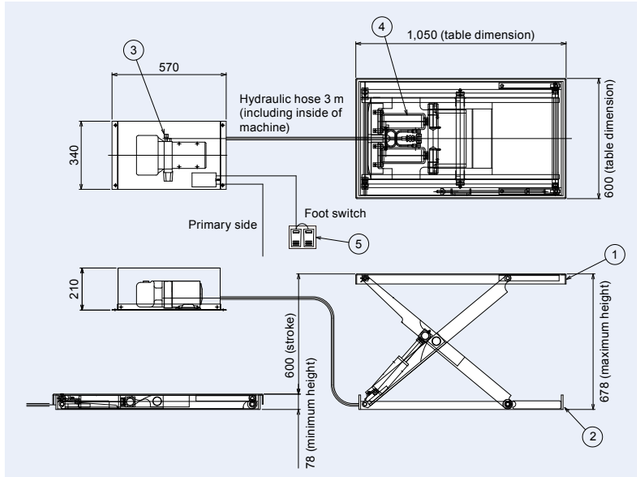

DATA Standard specifications

Model		THL-1006	
Movable load		1000kg	
Stroke (mm)		600	
Number of arm stages		One stage	
Minimum height (mm)		78	
Maximum height (mm)		678	
Power		Three-phase 200 V	
Motor output (kW)		L:0.55	H:0.55
Rising time (sec) 50 Hz/60 Hz		18/15	10/8
Cylinder		Ø 50 × 120 st × 2 piece	
Table dimensions (mm)	L:	1050	
	W:	600	
Dead weight rough standard (kg)		185	

NAME Name

① Table	④ Cylinder
② Base frame	⑤ Foot switch
③ Hydraulic unit	

Paint color	MG: major green / SG: super green / GR: gray
Operation	F: foot switch / B: two-point push button / no notation: delivery by lead wire
Optional parts	Three-point push button switch / anchor bracket attachment / limit switch attachment / 100 VAC power

MAX-TS Conductive table lifter

There are three variations of the Makitech conductive table lifter TSD1 series depending on the application.

Five features of the Makitech conductive table lifters

❶ Stable work!
- Stable work and lifting movement are realized by the structure with less rolling motion.

❷ Less operating noise!
- The operating noise that generates at the time of rising and lowering is made small by the design.

❸ Enhanced work efficiency!
- The work efficiency is enhanced by the excellent stop accuracy and the constant rising and lowering speed.

❹ Easy maintenance!
- The maintenance is easy compared with the hydraulic type, and the work environment can be kept clean without an oil leak.

❺ No hydraulic drift!
- No hydraulic drift occurs even if the table is kept lifted for a long time.

SELECT How to select a model

TS D1 – 05 06 – GR – F

- TS: MAX-TS series
- D1: Number of stages D1 = One stage
- 05: Movable load 05 = 500kg, 10 = 1000kg
- 06: Stroke 06 = 600mm, 10 = 1000mm
- GR: Paint color GR = Gray
- F: Switch F = Foot switch, B = Two-point push button switch, No symbol indicates delivery by lead wire

DATA Standard specifications

Movable load	Stroke S(mm)	Table size W×L(mm)	Minimum height h(mm)	Maximum height H(mm)	Motor (kW)	Dead weight (kg)	Model name	Rising/lowering time (sec) 50Hz/60Hz
0.5ton	600	820×1200	190	790	0.4	260	TSD1-0506	28/24
		1120×1200						
	1000	920×1500		1190	0.75	320	TSD1-0510	38/31
		1220×1500						
1.0ton	600	920×1200		790		290	TSD1-1006	28/23
		1220×1200						

The durability is proved by the tests conducted 200,000 times!

Actual load

DRAWING Standard dimensions

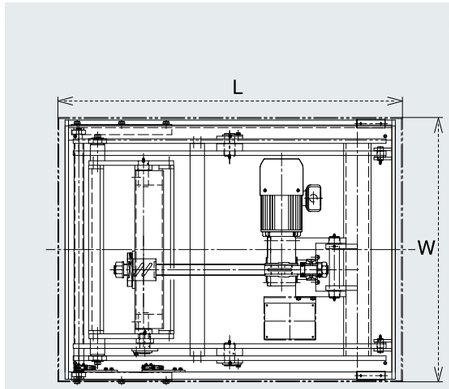

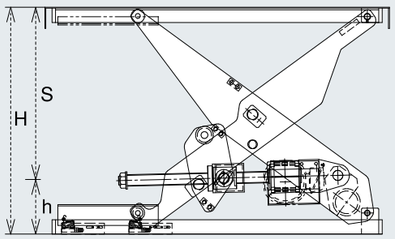

The minimum height of 190 mm is realized at the time of storage.

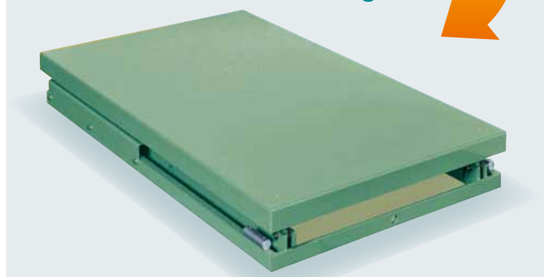

■Foot switch

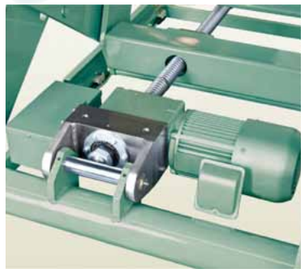

■Drive part

■Optional parts Various optional parts are available to meet customer needs.

① Bellow ② Foot SW with cover ③ Anchor bracket ④ C/V attachment

⑤ Cable extension ⑥ Inspection hole ⑦ Specified color

AIR LIFT

CONTENTS

Air lift

●Standard air lift	ALB-MB-N	P146
	ALB-SB	P147
	ALB-SB-H	P148
	ALB-WB	P149
	ALB-WB-H	P150
●Air lift with parallel link	ALB-TBL-N	P151
	ALB-TBL-WN	P152
	ALB-HB-N	P153
	ALB-HB-WN	P154
●Air lift with rollers	ALR-PR-57W	P155
	ALR-PR-57M	P156
	ALR-PR-57H	P157
	ALR-PR-57D	P158
	ALR-PRL-57D	P159
●Air lift with wheels	ALW-36	P160
●Air lift with ball casters	ALB-BB	P161
●Electric air lift	ADL	P162

●Air lift Q&A P163
●Guide list of rising/lowering times of air lift P166
●Air circuit P165
●Procedure for replacing hose P167

■What is an air lift?

An air lift is a lift machine with a simple structure that has special air hose built in between the upper and lower frames. The upper frame moves up and down by the air pressure.

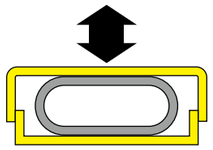

Features
■Easy attachment
■Quick delivery
■Low cost
■Low machine height and compact design
■Free way of use
■Can be used with air for factories

■List of air lift specifications

Name \ Specifications	Model	Stroke (mm)	Load (kg)	Machine length (mm)
Standard air lift	ALB-MB-N	20	30～310	300～1100 (100とび)
	ALB-SB	30	95～740	400～2000 (100とび)
	ALB-SB-H	20	150～1370	400～2000 (100とび)
	ALB-WB	30	100～1750	400～2000 (100とび)
	ALB-WB-H	20	160～2400	400～2000 (100とび)
Air lift with parallel link	ALB-TBL-N	30	80～720	400～2000 (100とび)
	ALB-TBL-WN	30	240～1440	500～2000 (100とび)
	ALB-HB-N	45	420～2000	600～2000 (100とび)
	ALB-HB-WN	45	672～3250	600～2000 (100とび)
Air lift with rollers	ALR-PR-57W	30	160～1440	408～2008 (100とび)
	ALR-PR-57M	30	80～720	408～2008 (100とび)
	ALR-PR-57H	20	200～1800	408～2008 (100とび)
Air lift with wheels	ALW-36	20	65～625	408～2008 (100とび)
Air lift with ball casters	ALB-BB	20	120～600	408～2008 (100とび)

■Paint color

Standard color (no symbol)

Orange
C12-60X
(Japan Paint Manufacturers Association Standard Paint Colors)
Close to Munsell symbol 2.5YR 6/14

Standard color G

Major Green
S31-513
(Japan Paint Manufacturers Association Standard Paint Colors)
Close to Munsell symbol 2.5G 6/3

Substandard color Y

Yellow
C22-80X
(Japan Paint Manufacturers Association Standard Paint Colors)
Close to Munsell symbol 2.5Y 8/14

ALB-MB-N

Stroke: 20 mm **For light loads**

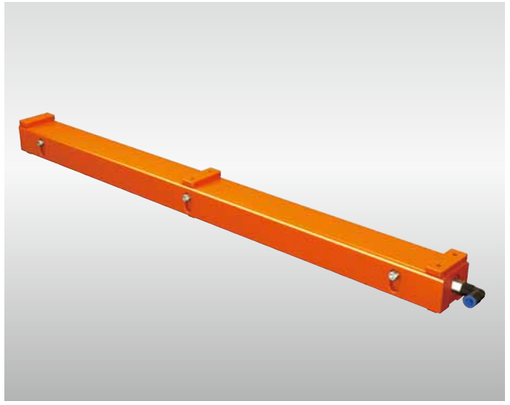

Side guide pin type
It is optimum for designing an up down machine in a small space.
The mounting plate has tapped holes machined.
A proximity switch can be attached.

■How to select a model

ALB - MB - ☐ N - ☐ - ☐ - ☐

- Machine length: 300～1100
- Connection diameter: No symbol: Ø 6 (standard)
- Paint color: No symbol: Orange (standard color); G: Major Green; Y: Yellow
- Proximity switch: No symbol: None; KA: 1/2 (quantity); KB: 1/2 (quantity); Omit "K" for models with only a bracket.

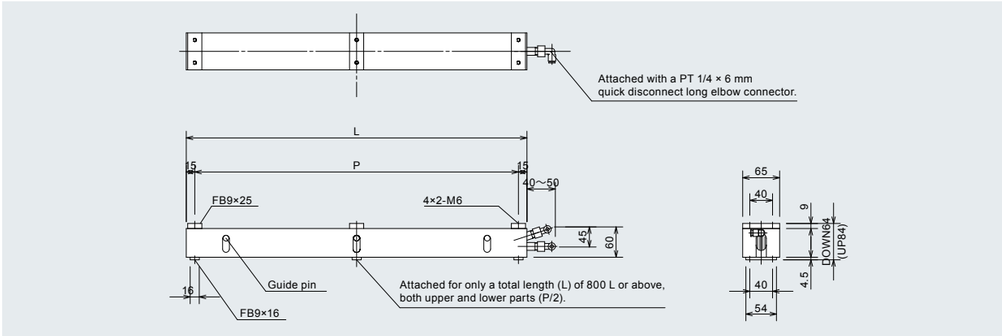

■ Standard specifications

(Unit: mm)

Model	ALB-MB								
	300N	400N	500N	600N	700N	800N	900N	1000N	1100N
Total length (L)	300	400	500	600	700	800	900	1,000	1,100
Attachment pitch (P)	270	370	470	570	670	770	870	970	1,070
Withstand load (kg)	30	65	100	135	170	205	240	275	310
Air consumption (Nℓ)	1.2	1.6	2.0	2.4	2.8	3.2	3.6	4.0	4.4
Rough standard dead weight (kg)	4.0	5.0	6.0	7.0	8.0	9.2	10.2	11.2	12.2

*The withstand load (kg) is an approximate theoretical value when the load is distributed equally to the air lift body having an internal pressure of 0.5 MPa (5 kg/cm²).
Select a model with 70% of the withstand load (kg).

[Mounting position of proximity switch and model notation]

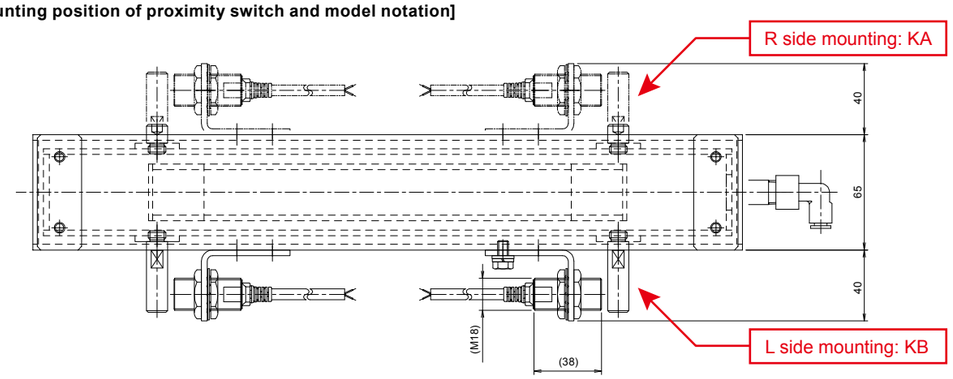

ALB-SB

Stroke: 30 mm **For medium loads**

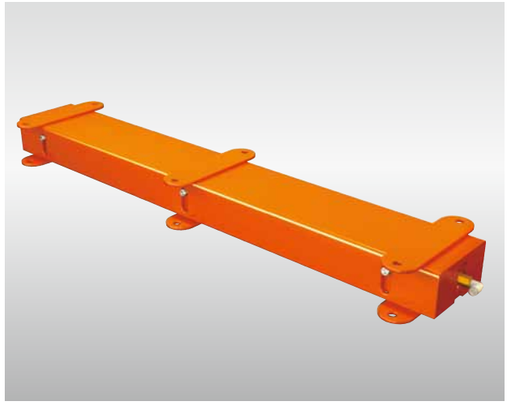

Side guide pin type
Can be mounted from above easily.
A proximity switch can be attached.

■How to select a model

ALB - SB - ☐ - ☐ - ☐ - ☐

- Machine length: 400～2000
- Connection diameter: No symbol: Ø 10 (standard); 2:Ø12
- Paint color: No symbol: Orange (standard color); G: Major Green; Y: Yellow
- Proximity switch: No symbol: None; KA: 1/2 (quantity); KB: 1/2 (quantity); KC: 1/2 (quantity); Omit "K" for models with only a bracket.

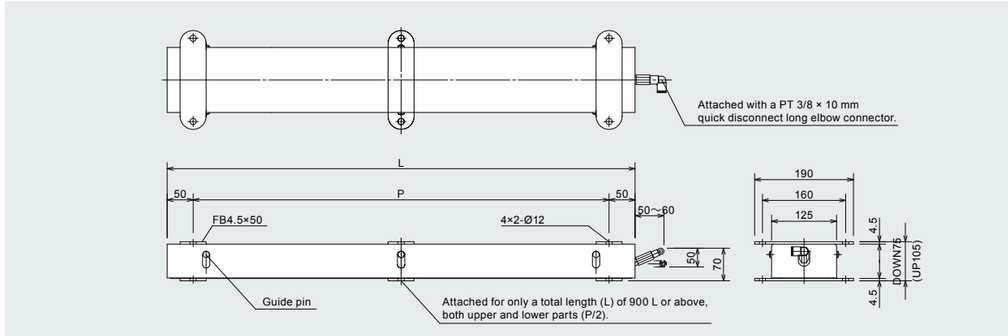

■ Standard specifications

(Unit: mm)

Model	ALB-SB																
	400	500	600	700	800	900	1000	1100	1200	1300	1400	1500	1600	1700	1800	1900	2000
Total length (L)	400	500	600	700	800	900	1000	1100	1200	1300	1400	1500	1600	1700	1800	1900	2000
Attachment pitch (P)	300	400	500	600	700	800	900	1000	1100	1200	1300	1400	1500	1600	1700	1800	1900
Withstand load (kg)	95	140	180	220	260	300	340	380	420	460	500	540	580	620	660	700	740
Air consumption (Nℓ)	3.0	3.75	4.5	5.25	6.0	6.75	7.5	8.25	9.0	9.75	10.5	11.25	12.0	12.75	13.5	14.25	15.0
Rough standard dead weight (kg)	12.1	14.3	16.5	18.7	20.9	23.8	26.0	28.2	30.4	32.6	34.8	37.0	39.2	41.4	43.6	45.8	48.0

*The withstand load (kg) is an approximate theoretical value when the load is distributed equally to the air lift body having an internal pressure of 0.5 MPa (5 kg/cm²).
Select a model with 70% of the withstand load (kg).

[Mounting position of proximity switch and model notation]

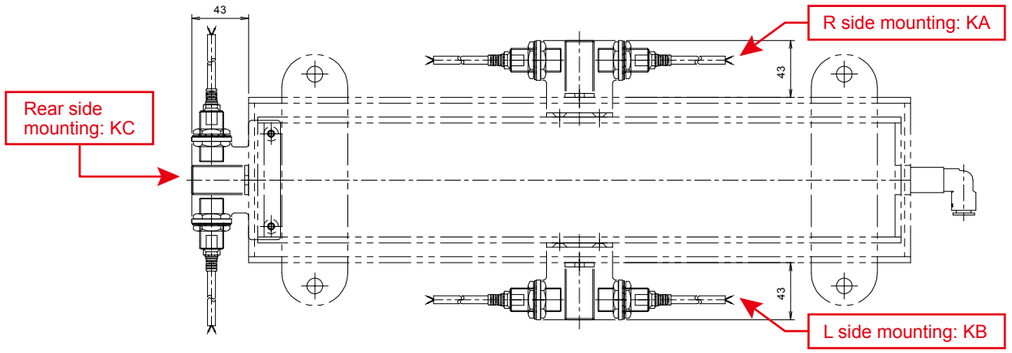

ALB-SB-H

Stroke: 20 mm **For heavy loads**

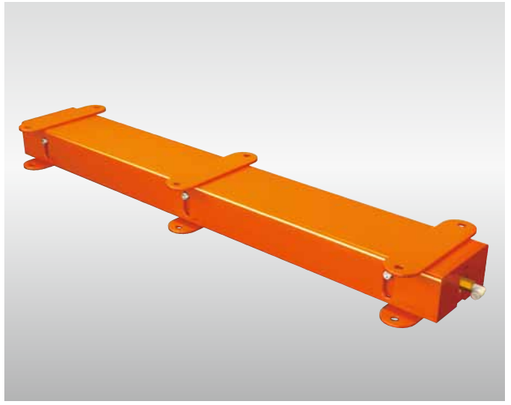

Side guide pin type
Can be mounted from above easily.
A proximity switch can be attached.

■How to select a model

ALB - SB - [ ] H - [ ] - [ ] - [ ]

- Machine length: 400~2000
- Connection diameter: No symbol: Ø 10 (standard); 2:Ø12
- Paint color: No symbol: Orange (standard color); G: Major Green; Y: Yellow
- Proximity switch: No symbol: None; KA: 1/2 (quantity); KB: 1/2 (quantity); KC: 1/2 (quantity); Omit "K" for models with only a bracket.

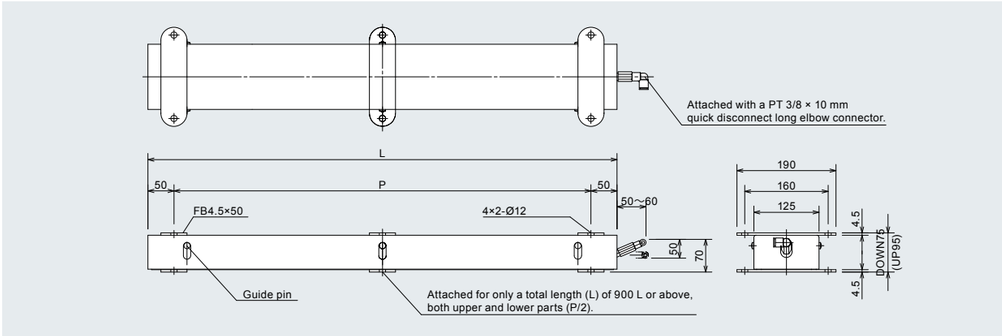

■ Standard specifications

(Unit: mm)

Model	ALB-SB																
	400H	500H	600H	700H	800H	900H	1000H	1100H	1200H	1300H	1400H	1500H	1600H	1700H	1800H	1900H	2000H
Total length (L)	400	500	600	700	800	900	1000	1100	1200	1300	1400	1500	1600	1700	1800	1900	2000
Attachment pitch (P)	300	400	500	600	700	800	900	1000	1100	1200	1300	1400	1500	1600	1700	1800	1900
Withstand load (kg)	150	270	390	460	530	600	670	740	810	880	950	1020	1090	1160	1230	1300	1370
Air consumption (Nℓ)	3.0	3.75	4.5	5.25	6.0	6.75	7.5	8.25	9.0	9.75	10.5	11.25	12.0	12.75	13.5	14.25	15.0
Rough standard dead weight (kg)	12.1	14.3	16.5	18.7	20.9	23.8	26.0	28.2	30.4	32.6	34.8	37.0	39.2	41.4	43.6	45.8	48.0

*The withstand load (kg) is an approximate theoretical value when the load is distributed equally to the air lift body having an internal pressure of 0.5 MPa (5 kg/cm²).
Select a model with 70% of the withstand load (kg).

[Mounting position of proximity switch and model notation]

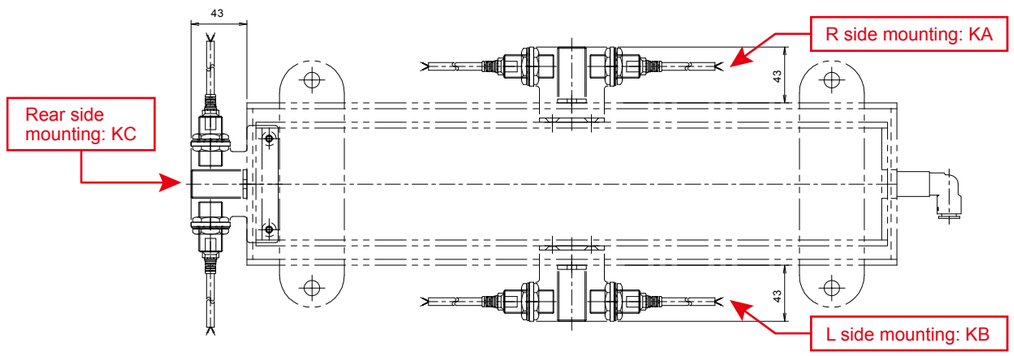

ALB-WB

Stroke: 30 mm **For heavy loads**

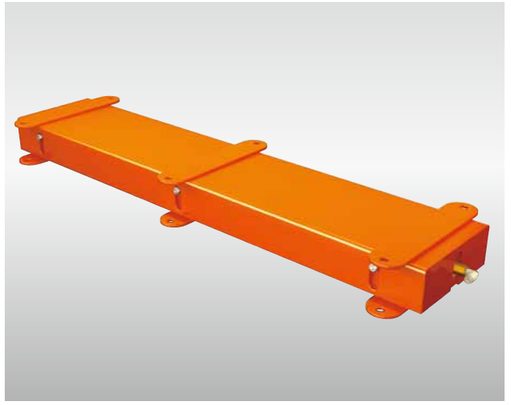

Stabler rising and lowering are realized
by the two hoses built in.
Can be mounted from above easily.
Optimum for large direction changing machines.
A proximity switch can be attached.

■How to select a model

ALB - WB - [ ] - [ ] - [ ] - [ ]

- Machine length: 400~2000
- Connection diameter: No symbol: Ø 10 (standard); 2:Ø12
- Paint color: No symbol: Orange (standard color); G: Major Green; Y: Yellow
- Proximity switch: No symbol: None; KA: 1/2 (quantity); KB: 1/2 (quantity); KC: 1/2 (quantity); Omit "K" for models with only a bracket.

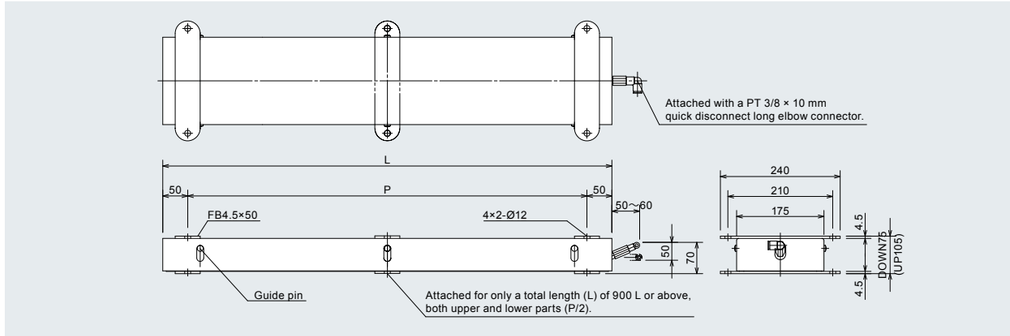

■ Standard specifications

(Unit: mm)

Model	ALB-WB																
	400	500	600	700	800	900	1000	1100	1200	1300	1400	1500	1600	1700	1800	1900	2000
Total length (L)	400	500	600	700	800	900	1000	1100	1200	1300	1400	1500	1600	1700	1800	1900	2000
Attachment pitch (P)	300	400	500	600	700	800	900	1000	1100	1200	1300	1400	1500	1600	1700	1800	1900
Withstand load (kg)	100	210	320	440	550	650	750	850	950	1050	1150	1250	1350	1450	1550	1650	1750
Air consumption (Nℓ)	6.0	7.5	9.0	10.5	12.0	13.5	15.0	16.5	18.0	19.5	21.0	22.5	24.0	25.5	27.0	28.5	30.0
Rough standard dead weight (kg)	14.2	17.0	19.8	22.6	25.4	28.2	31.0	33.8	36.6	39.4	42.2	45.0	47.8	50.6	53.4	56.2	59.0

*The withstand load (kg) is an approximate theoretical value when the load is distributed equally to the air lift body having an internal pressure of 0.5 MPa (5 kg/cm²).
Select a model with 70% of the withstand load (kg).

[Mounting position of proximity switch and model notation]

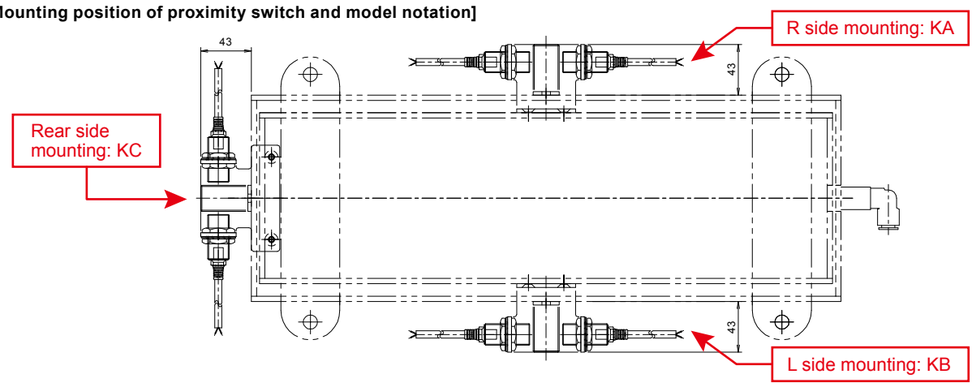

ALB-WB-H

Stroke: 20 mm | **For ultra heavy loads**

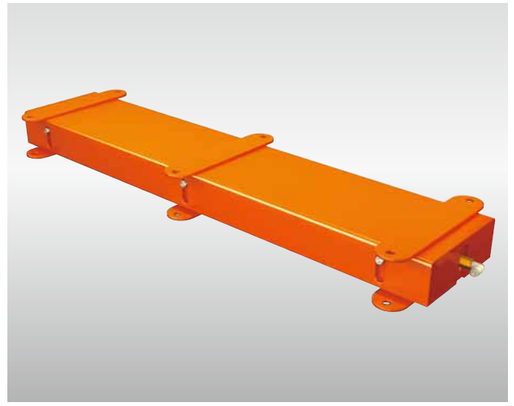

Side guide pin type
It is optimum for designing an up down machine in a small space.
A proximity switch can be attached.

■How to select a model

ALB - WB - ☐ H - ☐ - ☐ - ☐

- Machine length: 400～2000
- Connection diameter: No symbol: Ø 10 (standard); 2: Ø12
- Paint color: No symbol: Orange (standard color); G: Major Green; Y: Yellow
- Proximity switch: No symbol: None; KA: 1/2 (quantity); KB: 1/2 (quantity); KC: 1/2 (quantity); Omit "K" for models with only a bracket.

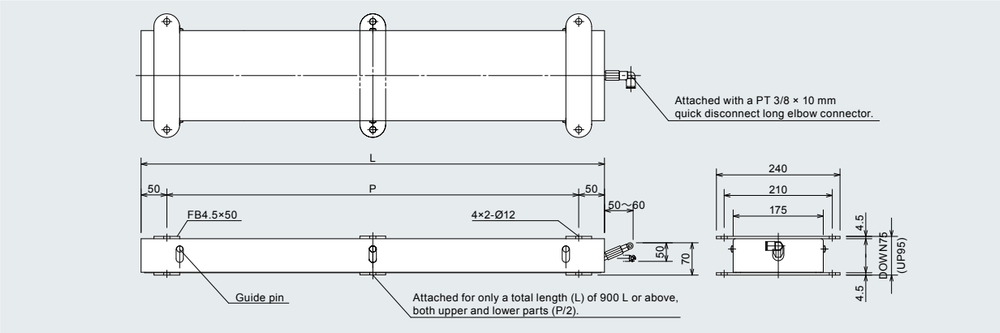

■ Standard specifications

(Unit: mm)

Model	ALB-WB																
	400H	500H	600H	700H	800H	900H	1000H	1100H	1200H	1300H	1400H	1500H	1600H	1700H	1800H	1900H	2000H
Total length (L)	400	500	600	700	800	900	1000	1100	1200	1300	1400	1500	1600	1700	1800	1900	2000
Attachment pitch (P)	300	400	500	600	700	800	900	1000	1100	1200	1300	1400	1500	1600	1700	1800	1900
Withstand load (kg)	160	300	440	580	720	860	1000	1140	1280	1420	1560	1700	1840	1980	2120	2260	2400
Air consumption (Nℓ)	6.0	7.5	9.0	10.5	12.0	13.5	15.0	16.5	18.0	19.5	21.0	22.5	24.0	25.5	27.0	28.5	30.0
Rough standard dead weight (kg)	14.2	17.0	19.8	22.6	25.4	28.2	31.0	33.8	36.6	39.4	42.2	45.0	47.8	50.6	53.4	56.2	59.0

*The withstand load (kg) is an approximate theoretical value when the load is distributed equally to the air lift body having an internal pressure of 0.5 MPa (5 kg/cm²).
Select a model with 70% of the withstand load (kg).

[Mounting position of proximity switch and model notation]

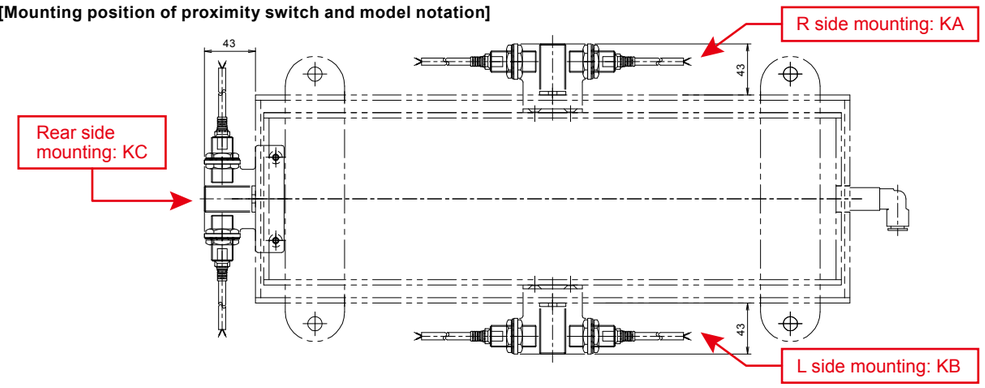

ALB-TBL-N

Stroke: 30 mm | **For light loads** | **Equipped with lowering speed adjustment function**

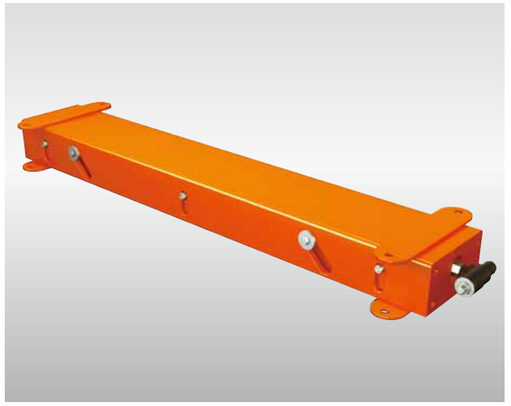

The built-in type of the parallel link mechanism.
Compact design with a low floor (90 mm).
The hose can be replaced without disassembling the lift.
A proximity switch can be attached.
Attached with a speed exhaust controller.

■How to select a model

ALB -TBL - ☐ N - ☐ - ☐ - ☐ - ☐

- Machine length: 400～2000
- Connection diameter: No symbol: Ø 12 (standard); 2: Ø16
- Paint color: No symbol: Orange (standard color); G: Major Green; Y: Yellow
- Proximity switch: No symbol: None; KA: 1/2 (quantity); KB: 1/2 (quantity); KC: 1/2 (quantity); Omit "K" for models with only a bracket.
- High speed type: No symbol: None; H: High speed type

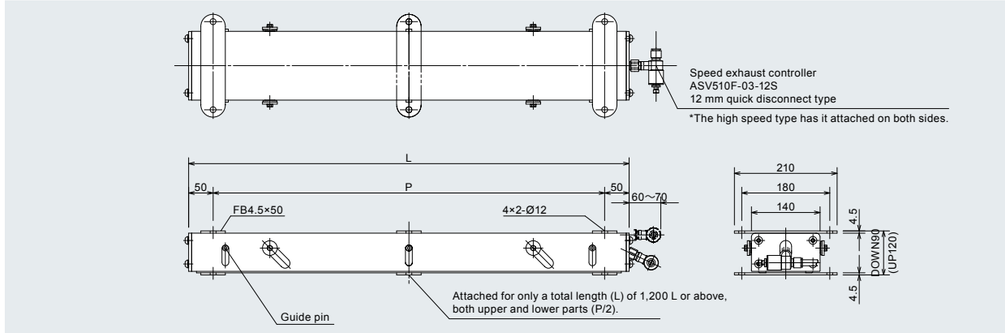

■ Standard specifications

(Unit: mm)

Model	ALB-TBL																
	400N	500N	600N	700N	800N	900N	1000N	1100N	1200N	1300N	1400N	1500N	1600N	1700N	1800N	1900N	2000N
Total length (L)	400	500	600	700	800	900	1000	1100	1200	1300	1400	1500	1600	1700	1800	1900	2000
Attachment pitch (P)	300	400	500	600	700	800	900	1000	1100	1200	1300	1400	1500	1600	1700	1800	1900
Withstand load (kg)	80	120	160	200	240	280	320	360	400	440	480	520	560	600	640	680	720
Air consumption (Nℓ)	3.0	3.75	4.5	5.25	6.0	6.75	7.5	8.25	9.0	9.75	10.5	11.25	12.0	12.75	13.5	14.25	15.0
Rough standard dead weight (kg)	11.0	12.5	13.5	15.0	16.0	17.5	19.0	20.0	21.1	23.0	24.0	25.0	26.0	26.5	27.0	27.5	28.0

*The withstand load (kg) is an approximate theoretical value when the load is distributed equally to the air lift body having an internal pressure of 0.5 MPa (5 kg/cm²).
Select a model with 70% of the withstand load (kg).

[Mounting position of proximity switch and model notation]

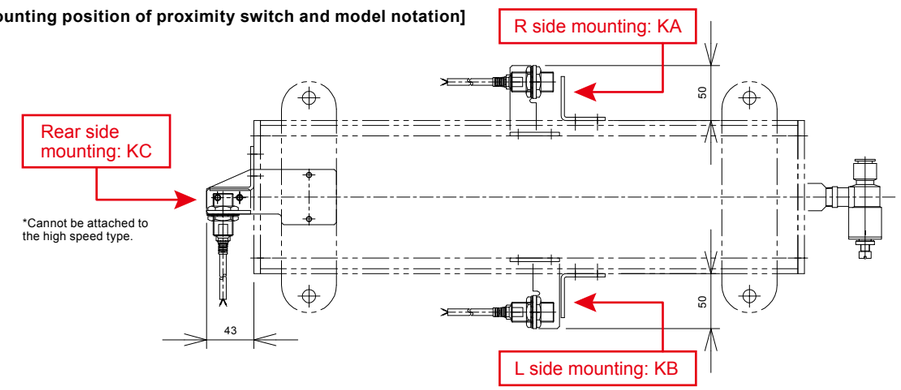

ALB-TBL-WN

Stroke: 30 mm | For heavy loads | Equipped with lowering speed adjustment function

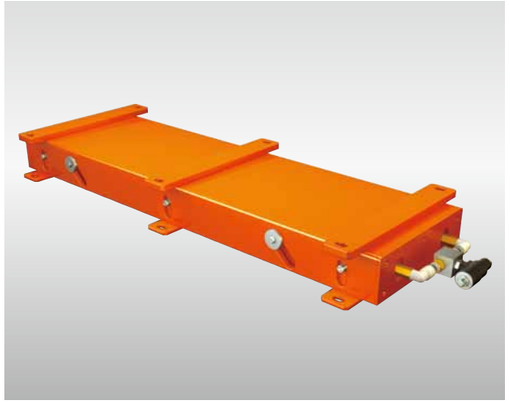

The built-in type of the parallel link mechanism.
The hose can be replaced without disassembling the lift.
The floor is lower and the movable load is larger compared with cylinders.
A proximity switch can be attached.
Attached with a speed exhaust controller.

■How to select a model

ALB-TBL-[ ]WN-[ ]-[ ]-[ ]-[ ]

- Machine length: 500～2000
- Connection diameter: No symbol: Ø 12 (standard); 2: Ø16
- Paint color: No symbol: Orange (standard color); G: Major Ggreen; Y: Yellow
- Proximity switch: No symbol: None; KA: 1/2 (quantity); KB: 1/2 (quantity); KC: 1/2 (quantity); Omit "K" for models with only a bracket.
- High speed type: No symbol: None; H: High speed type

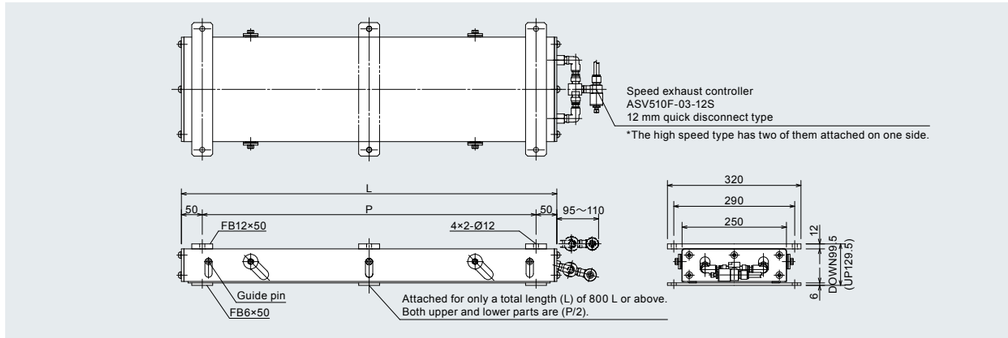

■ Standard specifications

(Unit: mm)

Model	ALB-TBL															
	500WN	600WN	700WN	800WN	900WN	1000WN	1100WN	1200WN	1300WN	1400WN	1500WN	1600WN	1700WN	1800WN	1900WN	2000WN
Total length (L)	500	600	700	800	900	1000	1100	1200	1300	1400	1500	1600	1700	1800	1900	2000
Attachment pitch (P)	400	500	600	700	800	900	1000	1100	1200	1300	1400	1500	1600	1700	1800	1900
Withstand load (kg)	240	320	400	480	560	640	720	800	880	960	1040	1120	1200	1280	1360	1440
Air consumption (Nℓ)	8	9	11	12	14	15	16	17	18	19	20	21	22	23	24	25
Rough standard dead weight (kg)	23	26	29	38	43	48	51	53	55	58	60	63	65	68	70	73

*The withstand load (kg) is an approximate theoretical value when the load is distributed equally to the air lift body having an internal pressure of 0.5 MPa (5 kg/cm²).
Select a model with 70% of the withstand load (kg).

[Mounting position of proximity switch and model notation]

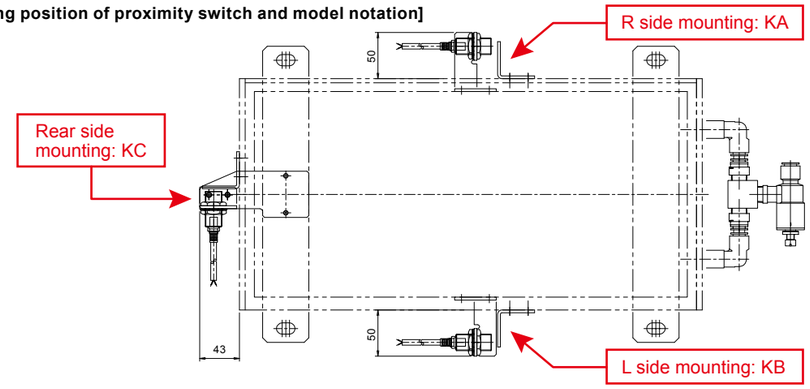

ALB-HB-N

Stroke: 45 mm | For heavy loads | Equipped with lowering speed adjustment function

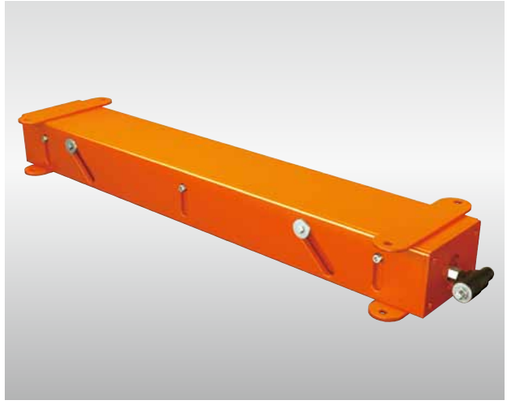

Transfer is possible even if the pallet is bent by a high stroke during direction change (45 mm).
The built-in type of the parallel link mechanism.
The floor is lower and the movable load is larger compared with cylinders.
The hose can be replaced without disassembling the lift.
A proximity switch can be attached.
Attached with a speed exhaust controller.

■How to select a model

ALB-HB-[ ]N-[ ]-[ ]-[ ]-[ ]

- Machine length: 600～2000
- Connection diameter: No symbol: Ø 12 (standard); 2: Ø16
- Paint color: No symbol: Orange (standard color); G: Major Ggreen; Y: Yellow
- Proximity switch: No symbol: None; KA: 1/2 (quantity); KB: 1/2 (quantity); KC: 1/2 (quantity); Omit "K" for models with only a bracket.
- High speed type: No symbol: None; H: High speed type

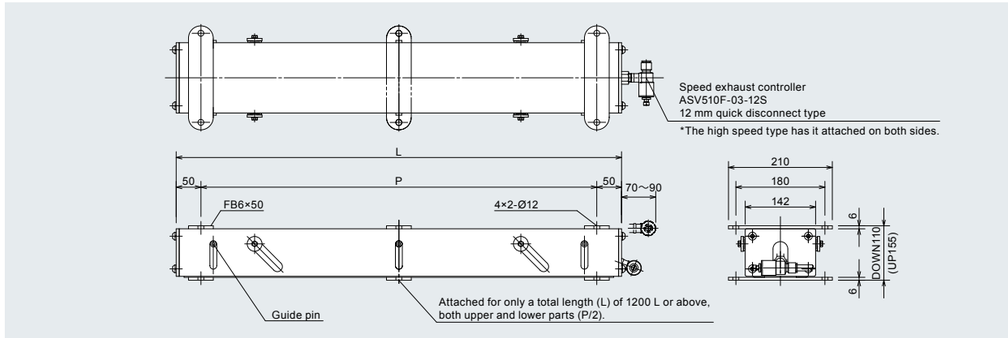

■ Standard specifications

(Unit: mm)

Model	ALB-HB														
	600N	700N	800N	900N	1000N	1100N	1200N	1300N	1400N	1500N	1600N	1700N	1800N	1900N	2000N
Total length (L)	600	700	800	900	1000	1100	1200	1300	1400	1500	1600	1700	1800	1900	2000
Attachment pitch (P)	500	600	700	800	900	1000	1100	1200	1300	1400	1500	1600	1700	1800	1900
Withstand load (kg)	420	540	660	780	900	1020	1140	1260	1380	1500	1600	1700	1800	1900	2000
Air consumption (Nℓ)	11	13	15	17	19	21	23	25	27	29	31	33	35	37	39
Rough standard dead weight (kg)	18	21	24	27	30	35	38	41	44	47	50	53	56	59	62

*The withstand load (kg) is an approximate theoretical value when the load is distributed equally to the air lift body having an internal pressure of 0.5 MPa (5 kg/cm²).
Select a model with 70% of the withstand load (kg).

[Mounting position of proximity switch and model notation]

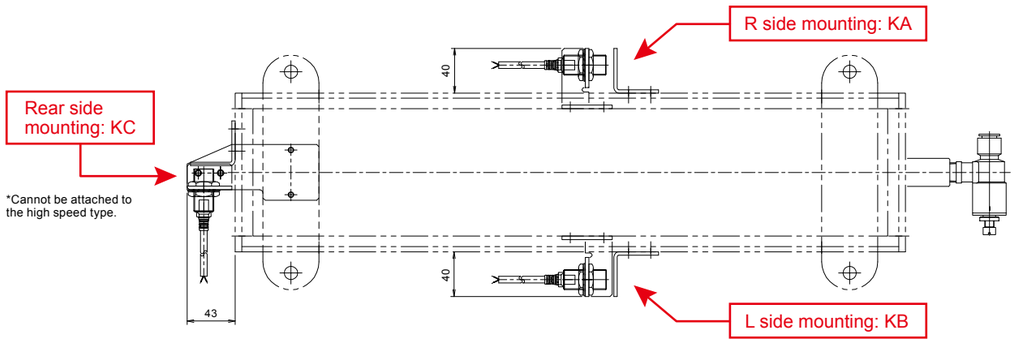

ALB-HB-WN

Stroke: 45 mm | For ultra heavy loads | Equipped with lowering speed adjustment function

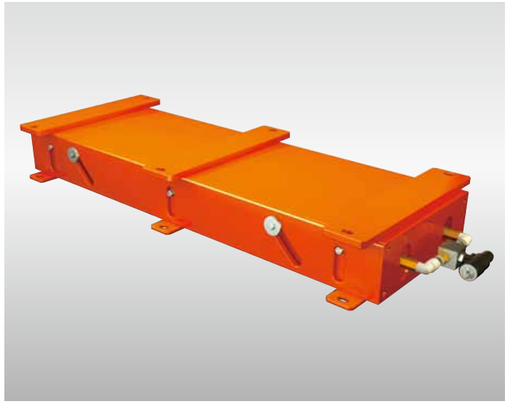

Compact design with a low floor for ultra heavy loads.
The built-in type of the parallel link mechanism.
It is stronger and stabler because two hoses are used.
The hose can be replaced without disassembling the lift.
A proximity switch can be attached.
Attached with a speed exhaust controller.

■How to select a model

ALB - HB - [ ] WN - [ ] - [ ] - [ ] - [ ]

- Machine length: 600～2000
- Connection diameter: No symbol: Ø 12 (standard); 2: Ø16
- Paint color: No symbol: Orange (standard color); G: Major Green; Y: Yellow
- Proximity switch: No symbol: None; KA: 1/2 (quantity); KB: 1/2 (quantity); KC: 1/2 (quantity); Omit "K" for models with only a bracket.
- High speed type: No symbol: None; H: High speed type

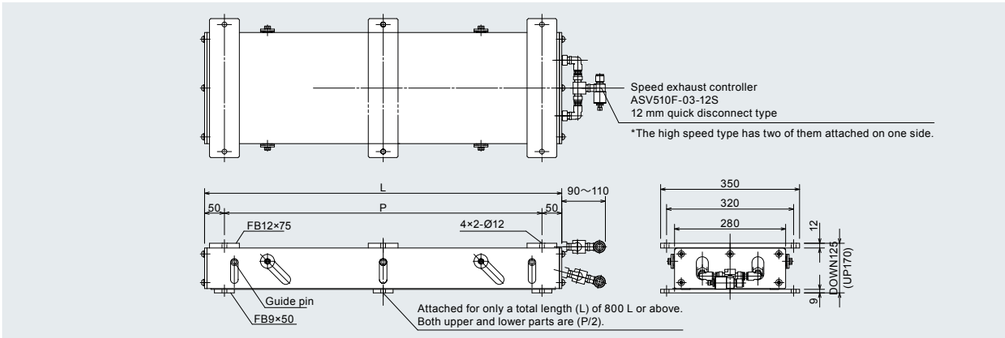

■ Standard specifications (Unit: mm)

Model	ALB-HB														
	600WN	700WN	800WN	900WN	1000WN	1100WN	1200WN	1300WN	1400WN	1500WN	1600WN	1700WN	1800WN	1900WN	2000WN
Total length (L)	600	700	800	900	1000	1100	1200	1300	1400	1500	1600	1700	1800	1900	2000
Attachment pitch (P)	500	600	700	800	900	1000	1100	1200	1300	1400	1500	1600	1700	1800	1900
Withstand load (kg)	672	864	1056	1248	1440	1632	1824	2016	2208	2379	2550	2725	2900	3075	3250
Air consumption (Nℓ)	22	26	30	34	38	42	46	50	54	58	62	66	70	74	78
Rough standard dead weight (kg)	45	51	57	63	65	69	73	77	81	85	89	93	97	101	105

*The withstand load (kg) is an approximate theoretical value when the load is distributed equally to the air lift body having an internal pressure of 0.5 MPa (5 kg/cm²).
Select a model with 70% of the withstand load (kg).

[Mounting position of proximity switch and model notation]

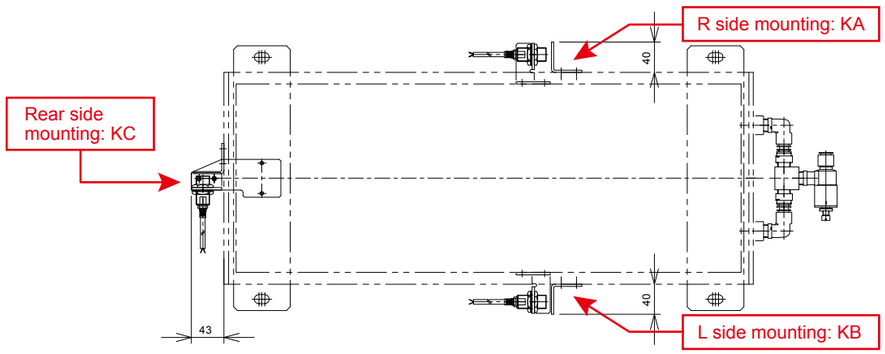

ALR-PR-57W

Stroke: 30 mm | For medium loads

Mounting is easy.
It is stronger and stabler because two hoses are used.
One lift is sufficient for small items.
A proximity switch can be attached.

■How to select a model

ALR - PR - 57 [ ] W - [ ] - [ ] - [ ]

- Machine length: 408 to 2,008
- Connection diameter: No symbol: φ 12 (standard)
- Paint color: No symbol: Orange (standard color); G: Major Green; Y: Yellow
- Proximity switch: No symbol: None; KA: 1/2 (quantity); KB: 1/2 (quantity); Omit "K" for models with only a bracket.

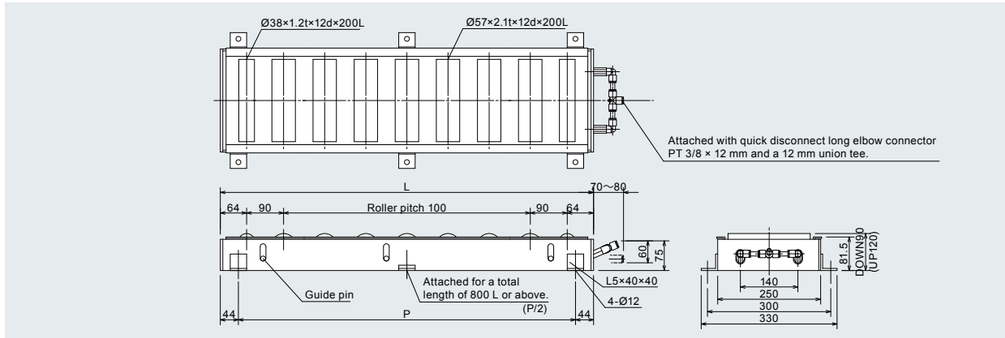

■ Standard specifications (Unit: mm)

Model	ALR-PR-57																
	408W	508W	608W	708W	808W	908W	1008W	1108W	1208W	1308W	1408W	1508W	1608W	1708W	1808W	1908W	2008W
Total length (L)	408	508	608	708	808	908	1008	1108	1208	1308	1408	1508	1608	1708	1808	1908	2008
Attachment pitch (P)	320	420	520	620	720	820	920	1020	1120	1220	1320	1420	1520	1620	1720	1820	1920
Withstand load (kg)	160	240	320	400	480	560	640	720	800	880	960	1040	1120	1200	1280	1360	1440
Air consumption (Nℓ)	6.0	7.5	9.0	10.5	12.0	13.5	15.0	16.5	18.0	19.5	21.0	22.5	24.0	25.5	27.0	28.5	30.0
Rough standard dead weight (kg)	16.0	19.5	23.0	26.5	30.0	33.5	37.0	40.5	44.0	47.5	51.0	54.5	58.0	61.5	65.0	68.5	72.0

*The withstand load (kg) is an approximate theoretical value when the load is distributed equally to the air lift body having an internal pressure of 0.5 MPa (5 kg/cm²).
Select a model with 70% of the withstand load (kg).

[Mounting position of proximity switch and model notation]

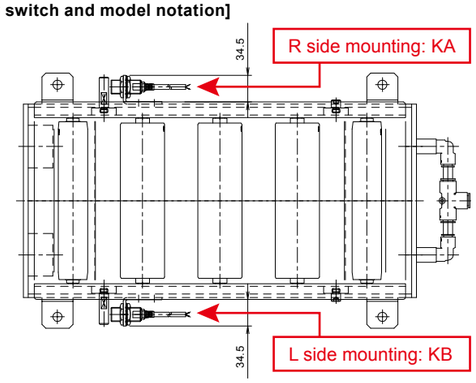

ALR-PR-57M

Stroke: 30 mm **For medium loads**

Mounting is easy.
Quick delivery.
Low cost.
Low machine height and compact design.
Free way of use.
Can be used with air for factories.
A proximity switch can be attached.

■How to select a model

ALR - PR - 57 ☐ M - ☐ - ☐ - ☐

- Machine length: 408～2008
- Connection diameter: No symbol: Ø 10 (standard); 2:Ø12
- Paint color: No symbol: Orange (standard color); G: Major Green; Y: Yellow
- Proximity switch: No symbol: None; KA: 1/2 (quantity); KB: 1/2 (quantity); Omit "K" for models with only a bracket.

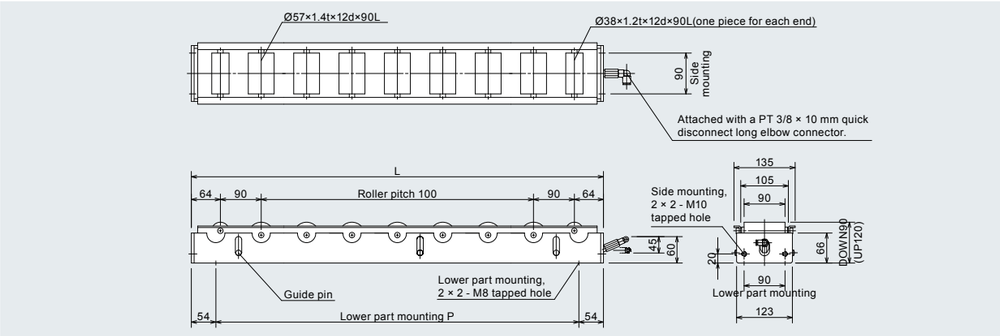

Note: For ALR-PR-57808M or above and other mounting methods besides direct placement, both ends and the center lower part must be used .

■ Standard specifications

(Unit: mm)

Model	ALR-PR-57																
	408M	508M	608M	708M	808M	908M	1008M	1108M	1208M	1308M	1408M	1508M	1608M	1708M	1808M	1908M	2008M
Total length (L)	408	508	608	708	808	908	1008	1108	1208	1308	1408	1508	1608	1708	1808	1908	2008
Attachment pitch (P)	300	400	500	600	700	800	900	1000	1100	1200	1300	1400	1500	1600	1700	1800	1900
Withstand load (kg)	80	120	160	200	240	280	320	360	400	440	480	520	560	600	640	680	720
Air consumption (Nℓ)	3.0	3.75	4.5	5.25	6.0	6.75	7.5	8.25	9.0	9.8	10.5	11.25	12.0	12.75	13.5	14.25	15.0
Rough standard dead weight (kg)	10	12	14	16	18	20	22	24	26	28	30	32	34	36	38	40	42

*The withstand load (kg) is an approximate theoretical value when the load is distributed equally to the air lift body having an internal pressure of 0.5 MPa (5 kg/cm²).
Select a model with 70% of the withstand load (kg).

[Mounting position of proximity switch and model notation]

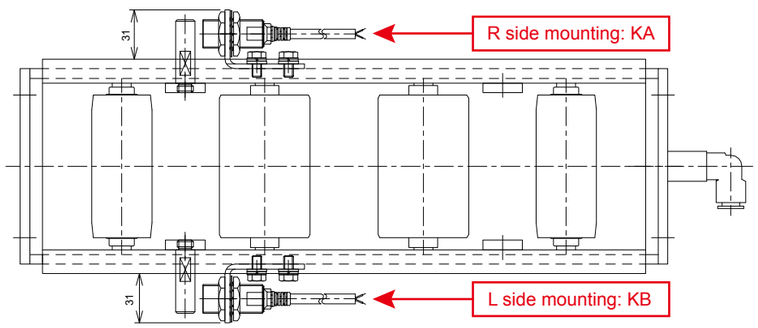

ALR-PR-57H

Stroke: 20 mm **For heavy loads**

The upper frame attached with rollers moves up and down.
It is optimum for direction changing machines in a free roller line.
The machine height is low (90 mm), and the air lift can be attached just by removing one roller from the existing roller conveyor (Ø 57 × 100 P) (crossing interval of carried items: 200 mm).
A proximity switch can be attached.

■How to select a model

ALR - PR - 57 ☐ H - ☐ - ☐ - ☐

- Machine length: 408～2008
- Connection diameter: No symbol: Ø 10 (standard)
- Paint color: No symbol: Orange (standard color); G: Major Green; Y: Yellow
- Proximity switch: No symbol: None; KA: 1/2 (quantity); KB: 1/2 (quantity); Omit "K" for models with only a bracket.

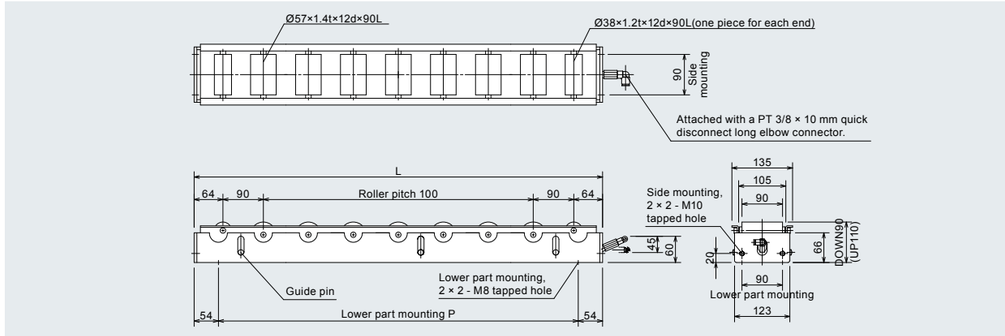

Note: For ALR-PR-57808H or above and other mounting methods besides direct placement, both ends and the center lower part must be used.

■ Standard specifications

(Unit: mm)

Model	ALR-PR-57																
	408H	508H	608H	708H	808H	908H	1008H	1108H	1208H	1308H	1408H	1508H	1608H	1708H	1808H	1908H	2008H
Total length (L)	408	508	608	708	808	908	1008	1108	1208	1308	1408	1508	1608	1708	1808	1908	2008
Attachment pitch (P)	300	400	500	600	700	800	900	1000	1100	1200	1300	1400	1500	1600	1700	1800	1900
Withstand load (kg)	200	300	400	500	600	700	800	900	1000	1100	1200	1300	1400	1500	1600	1700	1800
Air consumption (Nℓ)	3.0	3.75	4.5	5.25	6.0	6.75	7.5	8.25	9.0	9.8	10.5	11.25	12.0	12.75	13.5	14.25	15.0
Rough standard dead weight (kg)	10	12	14	16	18	20	22	24	26	28	30	32	34	36	38	40	42

*The withstand load (kg) is an approximate theoretical value when the load is distributed equally to the air lift body having an internal pressure of 0.5 MPa (5 kg/cm²).
Select a model with 70% of the withstand load (kg).

[Mounting position of proximity switch and model notation]

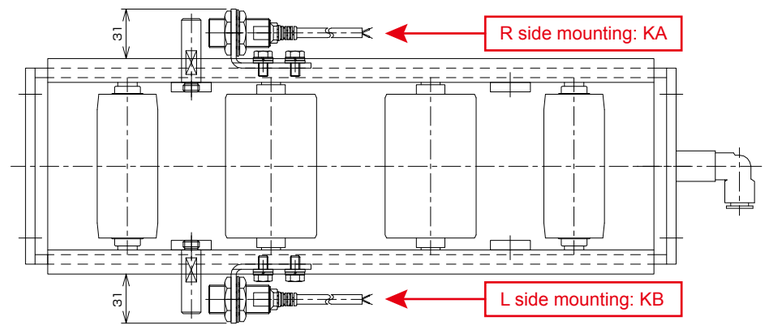

ALR-PR-57D

Stroke: 30 mm | For medium loads | Equipped with lowering speed adjustment function

The upper frame attached with rollers that have a built-in motor moves up and down.
The machine height is low (90 mm), and it is optimum for low floor type direction changing machines.
A larger movable load and stabler movement are realized by the two hoses. A proximity switch can be attached to the rising/lowering detection sensor .

■How to select a model

ALR - PR - 57 ☐ D - ☐ - ☐

- Machine length: 608～2008
- Specification options: T: One motor roller and one free roller; B: Attached with a motor roller brake, but the roller width is 314 L; *No inverter can be used when a brake is attached.; *Dimensions in ( ) are applied when a brake is attached.
- Connection diameter: No symbol: Ø 12 (standard); 2:Ø16

- ☐ - ☐ - ☐ - ☐

- Paint color: No symbol: Orange (standard color); G: Major Green; Y: Yellow
- Proximity switch: No symbol: None; KA: 1/2 (quantity); KB: 1/2 (quantity); Omit "K" for models with only a bracket.
- Speed
- Frequency

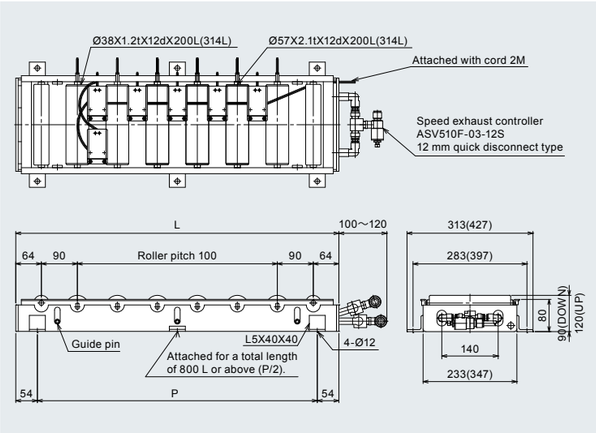

[Mounting position of proximity switch and model notation]

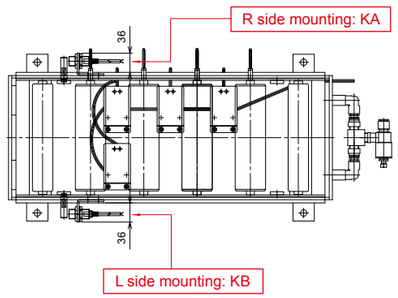

■ Standard specifications

(Unit: mm)

Model	ALR-PR-57												
	608D	708D	808D	908D	1008D	1108D	1208D	1308D	1408D	1508D	1608D	1808D	2008D
Total length (L)	608	708	808	908	1008	1108	1208	1308	1408	1508	1608	1808	2008
Attachment pitch (P)	500	600	700	800	900	1000	1100	1200	1300	1400	1500	1700	1900
Number of motor rollers	4	5	6	7	8	9	10	11	12	13	14	16	18
Air consumption (Nℓ)	9	11	12	14	15	17	18	20	21	23	25	29	33
Rough standard dead weight (kg)	27.0	31.5	36.0	40.5	45.0	49.5	54.0	58.5	63.0	67.5	72.0	81.0	90.0
Velocity m/min (50/60 Hz)	Transport load at internal pressure of 0.5 MPa												
2.5/2.8	320	400	480	560	640	720	800	880	960	1040	1120	1280	1440
3.4/3.8	320	400	480	560	640	720	800	880	960	1040	1120	1280	1440
4.7/5.2・4.2/4.6	290	360	430	500	570	640	710	780	850	920	990	1130	1270
5.7/6.3	210	260	310	360	410	460	510	560	610	660	710	810	910
7.0/7.7	170	210	250	290	330	370	410	450	490	530	570	650	730
8.5/9.4	140	170	200	230	260	290	320	350	380	410	440	500	560
9.1/10.8・11.2/13.3	100	130	160	190	220	250	280	310	340	370	400	460	520
12.4/14.8	90	110	130	150	170	190	210	230	250	270	290	330	370
15.2/18.0	70	90	110	130	150	170	190	210	230	250	270	310	350
17.0/20.2	60	80	100	120	140	160	180	200	220	240	260	300	340
20.7/24.6	50	70	90	110	130	150	170	190	210	230	250	290	330

*The withstand load (kg) is an approximate theoretical value when the load is distributed equally to the air lift body having an internal pressure of 0.5 MPa (5 kg/cm²).
Select a model with 70% of the withstand load (kg).When the specification option is "T", the rough standard for the transport load would be a half of the value in the above table.
*Blue numbers indicate the speed when no brake is used.

ALR-PRL-57D

Stroke: 45 mm | For medium loads | Equipped with lowering speed adjustment function

A motor roller drive type having a parallel link mechanism built in.
It is compact and a low floor type, and optimum for changing directions in a small space. A larger movable load and stabler movement are realized by the two hoses.
A proximity switch can be attached to the rising/lowering detection sensor.

■How to select a model

ALR - PRL - 57 ☐ D - ☐ - ☐

- Machine length: 600～2000
- Specification options: T: One motor roller and one free roller; B: Attached with a motor roller brake, but the roller width is 314 L; *No inverter can be used when a brake is attached.; *Dimensions in ( ) are applied when a brake is attached.
- Connection diameter: No symbol: Ø 12 (standard); 2:Ø16

- ☐ - ☐ - ☐ - ☐

- Paint color: No symbol: Orange (standard color); G: Major Green; Y: Yellow
- Proximity switch: No symbol: None; KA: 1/2 (quantity); KB: 1/2 (quantity); Omit "K" for models with only a bracket.
- Speed
- Frequency

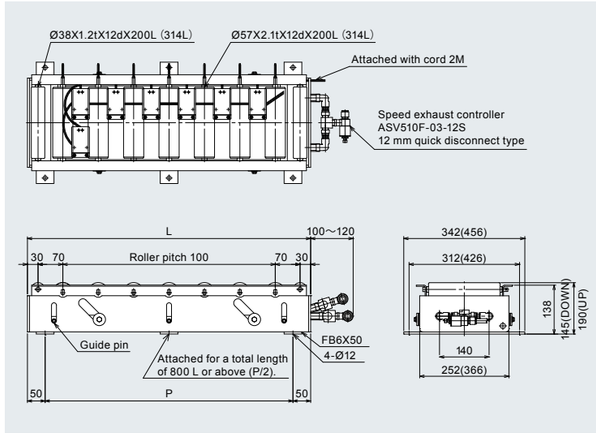

[Mounting position of proximity switch and model notation]

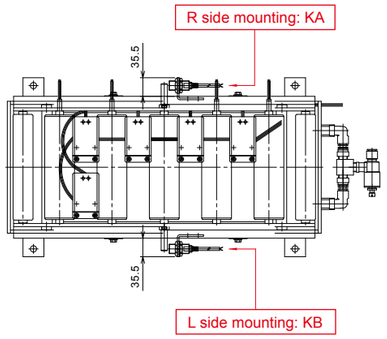

■ Standard specifications

(Unit: mm)

Model	ALR-PRL-57												
	600D	700D	800D	900D	1000D	1100D	1200D	1300D	1400D	1500D	1600D	1800D	2000D
Total length (L)	600	700	800	900	1000	1100	1200	1300	1400	1500	1600	1800	2000
Attachment pitch (P)	500	600	700	800	900	1000	1100	1200	1300	1400	1500	1700	1900
Number of motor rollers	5	6	7	8	9	10	11	12	13	14	15	17	19
Air consumption (Nℓ)	22	26	30	34	38	42	46	50	54	58	62	70	78
Rough standard dead weight (kg)	50.0	57.5	65.0	72.5	80.0	87.5	95.0	102.5	110.0	118.5	125.0	140.0	155.0
Velocity m/min (50/60 Hz)	Transport load at internal pressure of 0.5 MPa												
2.5/2.8	400	480	560	640	720	720	880	960	1040	1120	1120	1280	1440
3.4/3.8	400	480	560	640	720	720	880	960	1040	1120	1120	1280	1440
4.7/5.2・4.2/4.6	360	430	500	570	640	640	780	850	920	990	1060	1200	1340
5.7/6.3	260	310	360	410	460	460	560	610	660	710	760	860	960
7.0/7.7	210	250	290	330	370	370	450	490	530	570	610	680	750
8.5/9.4	170	200	230	260	290	290	350	380	410	440	470	530	590
9.1/10.8・11.2/13.3	130	160	190	220	250	250	310	340	370	400	430	490	550
12.4/14.8	110	130	150	170	190	190	230	250	270	290	310	350	390
15.2/18.0	90	110	130	150	170	170	210	230	250	270	290	330	370
17.0/20.2	80	100	120	140	160	160	200	220	240	260	280	320	360
20.7/24.6	70	90	110	130	150	150	190	210	230	250	270	310	350

*The withstand load (kg) is an approximate theoretical value when the load is distributed equally to the air lift body having an internal pressure of 0.5 MPa (5 kg/cm²).
Select a model with 70% of the withstand load (kg).When the specification option is "T", the rough standard for the transport load would be a half of the value in the above table.
*Blue numbers indicate the speed when no brake is used.

ALW-36

Stroke: 20 mm | **For light loads**

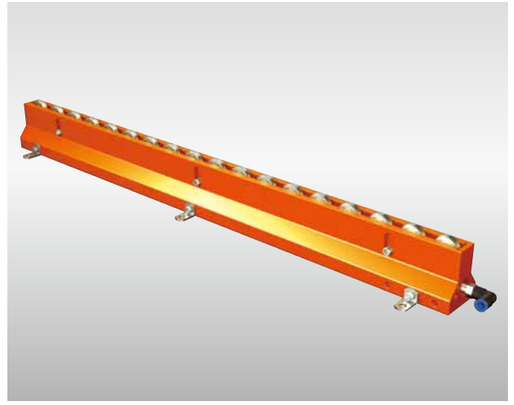

It can be built in without changing the roller pitch of the roller conveyor (Ø 57 × 100 P).
A proximity switch can be attached.

■How to select a model

ALW - 36 □ - □ - □ - □

- Machine length: 408~2008
- Connection diameter: No symbol: Ø 6 (standard)
- Paint color: No symbol: Orange (standard color); G: Major Green; Y: Yellow
- Proximity switch: No symbol: None; KA: 1/2 (quantity); KB: 1/2 (quantity); KC: 1/2 (quantity); Omit "K" for models with only a bracket.

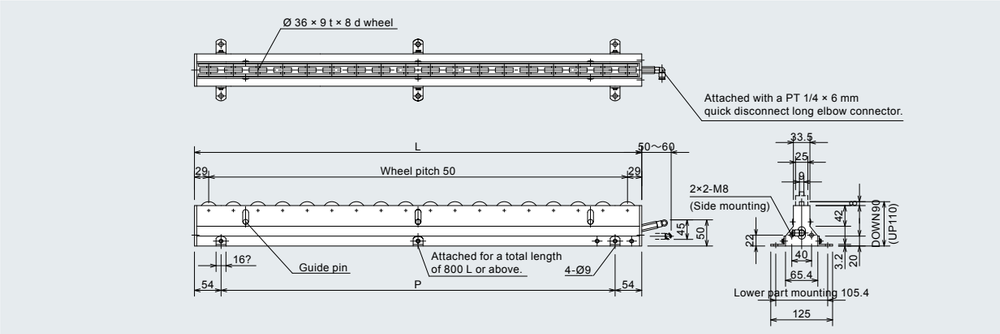

■ Standard specifications

(Unit: mm)

Model	ALW-36																
	408	508	608	708	808	908	1008	1108	1208	1308	1408	1508	1608	1708	1808	1908	2008
Total length (L)	408	508	608	708	808	908	1008	1108	1208	1308	1408	1508	1608	1708	1808	1908	2008
Attachment pitch (P)	300	400	500	600	700	800	900	1000	1100	1200	1300	1400	1500	1600	1700	1800	1900
Withstand load (kg)	65	100	135	170	205	240	275	310	345	380	415	450	485	520	555	590	625
Air consumption (Nℓ)	1.6	2.0	2.4	2.8	3.2	3.6	4.0	4.4	4.8	5.2	5.6	6.0	6.4	6.8	7.2	7.6	8.0
Rough standard dead weight (kg)	5.5	7.0	8.5	10.0	11.5	13.0	14.5	16.0	17.5	19.0	20.5	22.0	23.5	25.0	26.5	28.0	29.5

*The withstand load (kg) is an approximate theoretical value when the load is distributed equally to the air lift body having an internal pressure of 0.5 MPa (5 kg/cm²).
Select a model with 70% of the withstand load (kg).

[Mounting position of proximity switch and model notation]

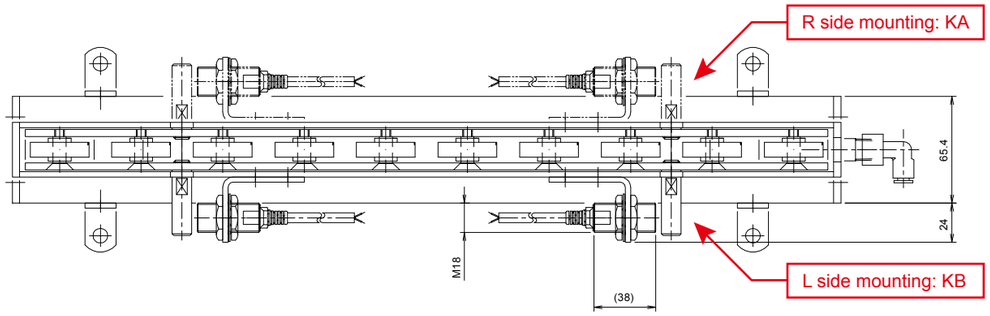

ALB-BB

Stroke: 20 mm | **For medium loads**

It can rotate freely because the ball casters are built in.
A proximity switch can be attached.

■How to select a model

ALB - BB - □ - □ - □ - □

- Machine length: 408~2008
- Connection diameter: No symbol: Ø 10 (standard); 2:Ø12
- Paint color: No symbol: Orange (standard color); G: Major Green; Y: Yellow
- Proximity switch: No symbol: None; KA: 1/2 (quantity); KB: 1/2 (quantity); KC: 1/2 (quantity); Omit "K" for models with only a bracket.

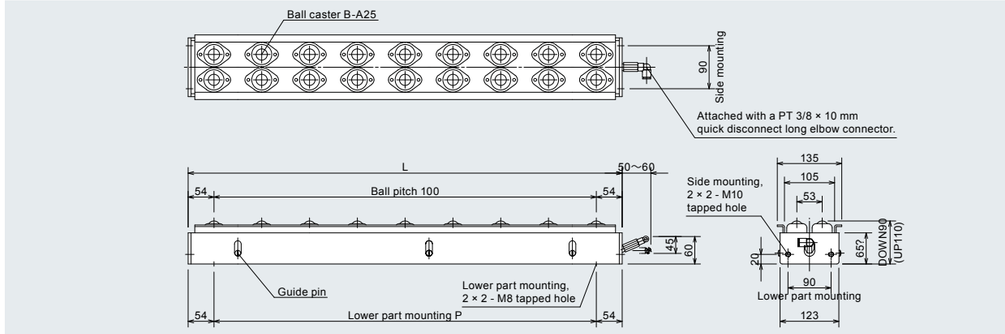

Note: For ALB-BB-808 or above and other mounting methods besides direct placement, both ends and the center lower part must be used.

■ Standard specifications

(Unit: mm)

Model	ALB-BB																
	408	508	608	708	808	908	1008	1108	1208	1308	1408	1508	1608	1708	1808	1908	2008
Total length (L)	408	508	608	708	808	908	1008	1108	1208	1308	1408	1508	1608	1708	1808	1908	2008
Attachment pitch (P)	300	400	500	600	700	800	900	1000	1100	1200	1300	1400	1500	1600	1700	1800	1900
Withstand load (kg)	120	150	180	210	240	270	300	330	360	390	420	450	480	510	540	570	600
Air consumption (Nℓ)	3.0	3.75	4.5	5.25	6.0	6.75	7.5	8.25	9.0	9.75	10.5	11.25	12.0	12.75	13.5	14.25	15.0
Rough standard dead weight (kg)	7.0	8.5	10.0	11.5	13.0	14.5	16.0	17.5	19.0	19.5	21.0	22.5	24.0	25.5	27.0	28.5	30.0

*The withstand load (kg) is an approximate theoretical value when the load is distributed equally to the air lift body having an internal pressure of 0.5 MPa (5 kg/cm²).
Select a model with 70% of the withstand load (kg).

[Mounting position of proximity switch and model notation]

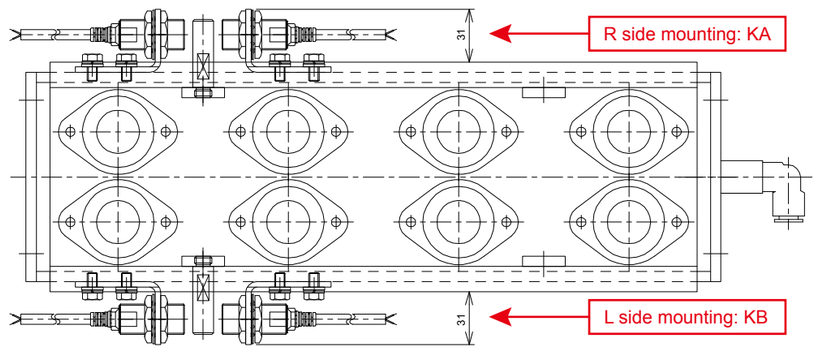

ADL Electric lift

Rising/lowering detection sensor

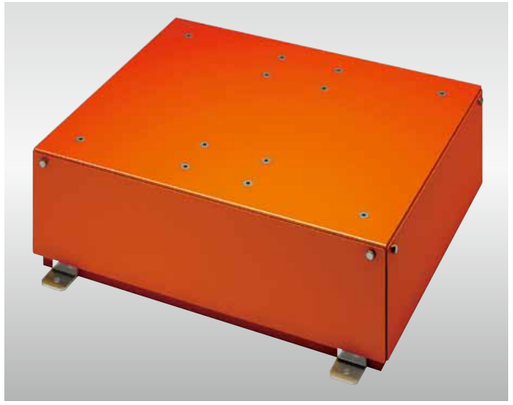

■How to select a model

ADL1 - ☐

Mounting position
No symbol: Unnecessary
KA・KB・KC

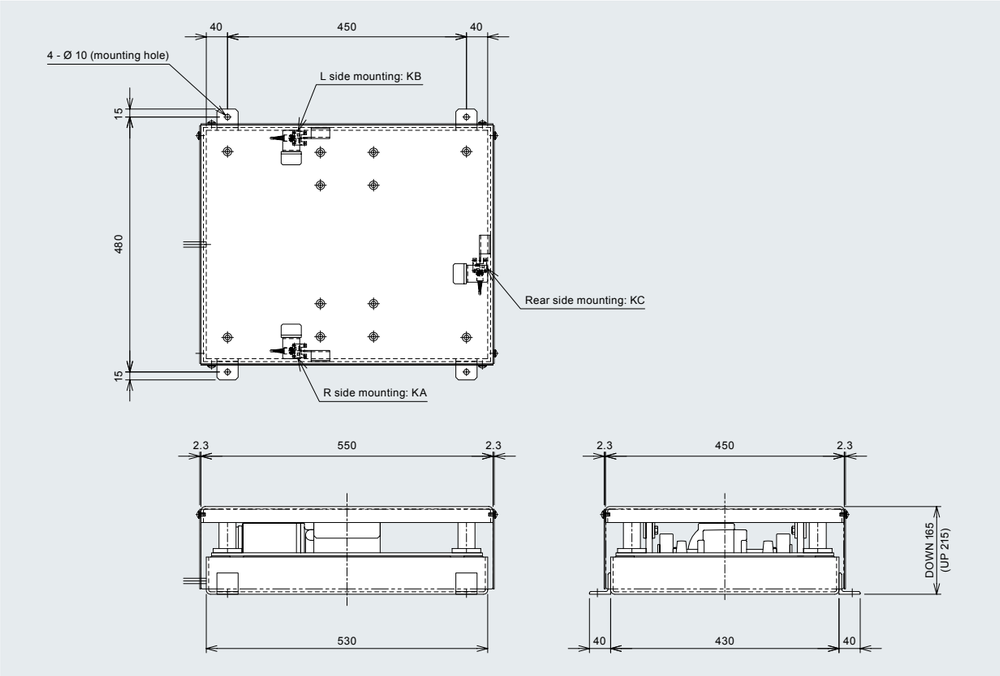

■ Specifications

Model	ADL1
Drive system	Motor method (90 w)
Rising/lowering detection sensor	No symbol: unnecessary, mounting position: KA, KB, KC
Withstand load	130kg

Standard paint colors
Orange (C12-60X)
Major Green (S31-513)
Metallic silver

Air lift Q&A

Q1 Can an offset load be applied to the air lift?

A Avoid using the air lift in a way in which an offset load or an impact load will be applied. Select a model with 70% of the withstand load (kg).

Q2 Can welding or hole drilling be performed on the air lift body?

A 1. Do not perform welding on the air lift body. When welding needs to be performed inevitably, make sure to remove the hose.
2. Avoid hole drilling that penetrates the body because the hose may break.

Q3 What is the maximum operating temperature?

A Use the air lift at an operating temperature of 60°C or below.

Q4 Can air for general factories be used?

A Air for general factories can be used. Do not use chemicals, synthetic oil containing organic solvents, or corrosive gas because they may deteriorate or break the hose.

Q5 How do you make the lowering speed faster or slower?

A 1. When you want to make the speed faster, attach a quick exhaust valve or install a valve near the body to make the exhaust resistance smaller.
2. When the lowering speed is rapid, make it slower by exhaust adjustment because it is dangerous and may damage the air hose.

Q6 How do you make the rising speed faster?

A (1) Increase the pressure. (2) Make the piping resistance smaller. (3) Connect the pipe with a flow rate that is larger than the necessary air amount to a position that is closest to the air lift.

Q7 How often should the hose be replaced?

A The rough standard for replacing the hose is 3 years or 300,000 times of use. The above usable years and the number of times are for reference because the special rubber used for the built-in hose deteriorates naturally by aging and there are various factors such as operating environment, operating conditions, age of service, operating states, etc. Replace the hose immediately if air leaks.

Q8 What would you do if the air lift does not rise completely because of insufficient air pressure?

A Add an air sub tank.

Q9 Is the long elbow connector fixed?

A The long elbow connector moves vertically and horizontally when the air comes in and goes out. Therefore, it should be set in a way that it does not interfere with other machines so that it can freely swing.

Q10 Is there any precaution for using several air lifts at the same time?

A 1. When using several air lifts at the same time, make a design so that the loading equipment itself becomes one united structure.
2. When synchronous control cannot be performed, use a balance weight for adjustment.
3. The piping length must be the same.
4. Be careful with the air consumption.

Q11 How long is the warranty period of the air lift?

A The shortest period of the following would be the warranty period: 12 months after factory shipment (limited to new products only), 2,400 hours after movement, or 300,000 times of use.
Read the instruction manual carefully, and use the air lift appropriately.

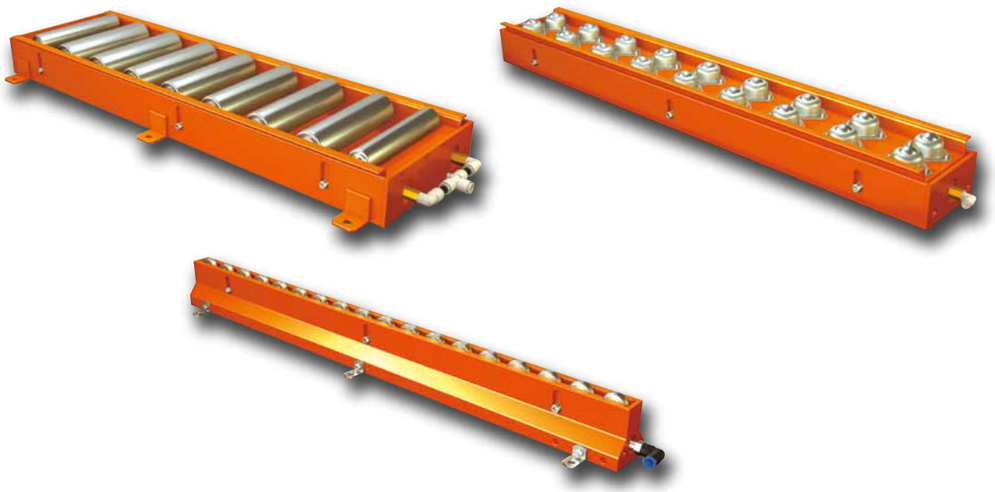

Air circuit

■ When used in a single row

(1) When adjustment is unnecessary

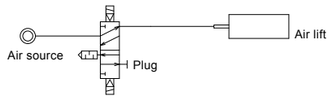

(2) To adjust the rising speed and make the lowering speed faster

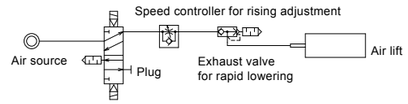

■ When used in double rows (ALR-PR / ALW-36 / ALB-BB)

(1) When adjustment is unnecessary

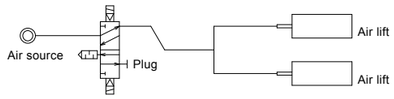

(2) To adjust the rising speed

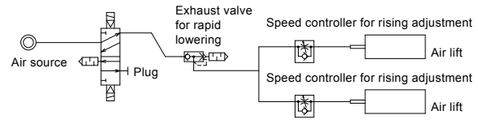

■ When used in double rows and an integrally connected type

(1) To adjust the rising speed and the lowering speed

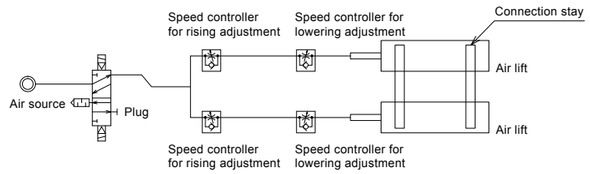

(2) To adjust the rising speed and the lowering speed, and to make the lowering speed faster than (1)

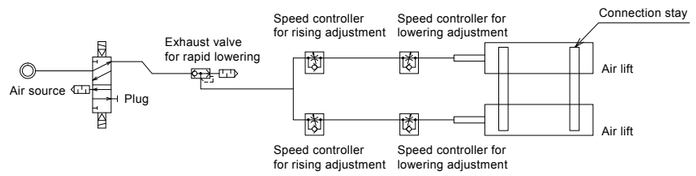

(3) To adjust the rising speed and the lowering speed, and to make the lowering speed faster than (2)

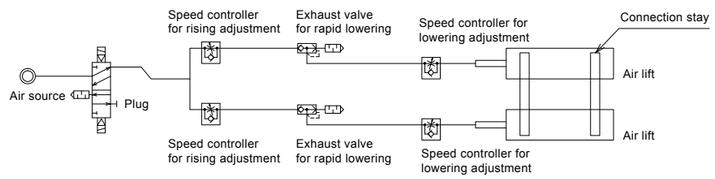

Guide list of rising and lowering times of air lift

■ Layout drawing

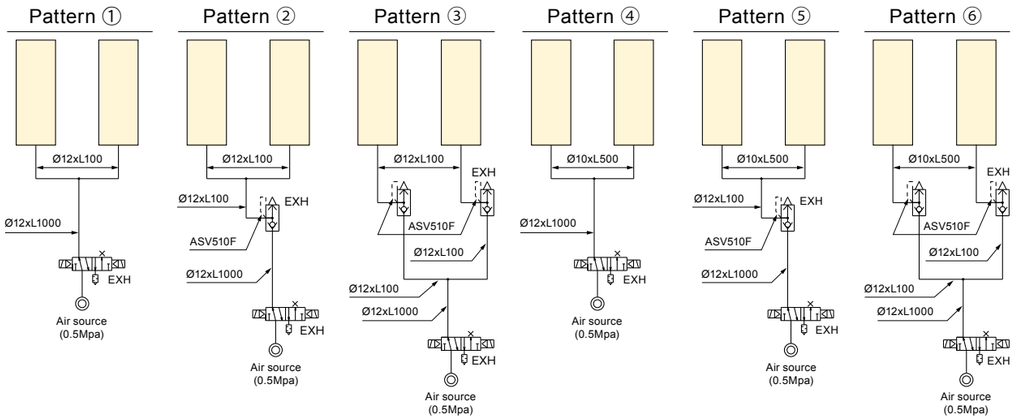

■ Specifications of air instruments

Instrument used	Model	Manufacturer	Connection diameter Rc
Solenoid valve	SY9220-C12	SMC	1/4
Rapid exhaust valve	ASV510F	SMC	3/8

Common specifications (patterns ① to ⑥)

- Air pressure: 0.5 Mpa
- Valve: SY9220-C12 (SMC product)
- Rapid exhaust valve: ASV510F (SMC product)

■ Model: HB-1000N, air consumption: 19 NL/unit

(Unit: sec)

Layout drawing pattern	Load / Rapid exhaust valve	No load		20 kg (one side: 10 kg)		60 kg (one side: 30 kg)		400 kg uniform load		800 kg uniform load	
		Rising	Lowering	Rising	Lowering	Rising	Lowering	Rising	Lowering	Rising	Lowering
①	ASV510F None	0.40	11.50	0.40	8.10	0.49	6.50	0.80	4.70	1.22	4.22
②	ASV510F 1 pc	0.47	7.90	0.47	5.00	0.51	4.10	0.90	3.45	1.40	2.84
③	ASV510F 1 pc	0.42	2.70	0.42	2.00	0.50	1.70	1.00	1.20	1.26	0.96

■ Model: HB-1200WN, air consumption: 46 NL/unit

(Unit: sec)

Layout drawing pattern	Load / Rapid exhaust valve	No load		20 kg (one side: 10 kg)		60 kg (one side: 30 kg)		400 kg uniform load		800 kg uniform load		1,200 kg uniform load	
		Rising	Lowering	Rising	Lowering	Rising	Lowering	Rising	Lowering	Rising	Lowering	Rising	Lowering
①	ASV510F None	0.75	24.40	0.78	21.00	0.84	17.04	1.23	12.20	1.38	10.14	1.91	9.71
②	ASV510F 1 pc	0.80	13.10	0.84	10.46	0.92	8.74	1.18	6.09	1.45	5.20	2.02	6.15
③	ASV510F 1 pc	0.73	7.34	0.78	5.53	0.85	4.72	1.14	3.50	1.52	2.84	2.00	2.63

■ Model: SB-1000, air consumption: 7.5 NL/unit

(Unit: sec)

Layout drawing pattern	Load / Rapid exhaust valve	No load		20 kg (one side: 10 kg)		60 kg (one side: 30 kg)		400 kg uniform load	
		Rising	Lowering	Rising	Lowering	Rising	Lowering	Rising	Lowering
④	ASV510F None	0.18	3.43	0.19	2.99	0.19	2.58	0.60	0.92
⑤	ASV510F 1 pc	0.16	1.90	0.19	1.74	0.24	1.32	0.62	0.55
⑥	ASV510F 1 pc	0.17	1.32	0.20	1.26	0.23	0.97	0.41	0.64

■ Model: WB-1000, air consumption: 15 NL/unit

(Unit: sec)

Layout drawing pattern	Load / Rapid exhaust valve	No load		20 kg (one side: 10 kg)		60 kg (one side: 30 kg)		400 kg uniform load		800 kg uniform load		1,200 kg uniform load	
		Rising	Lowering	Rising	Lowering	Rising	Lowering	Rising	Lowering	Rising	Lowering	Rising	Lowering
④	ASV510F None	0.24	6.96	0.27	5.66	0.32	4.77	0.49	3.04	0.96	2.53	1.36	2.10
⑤	ASV510F 1 pc	0.29	4.61	0.31	4.69	0.35	2.82	0.51	1.88	1.05	1.76	1.73	1.49
⑥	ASV510F 1 pc	0.28	2.87	0.30	2.76	0.36	1.96	0.48	1.14	0.97	1.07	1.60	0.98

*The above table is for reference and does not assure the actual rising and lowering times.

Procedure for replacing hose
(air lifts that do not require disassembly)

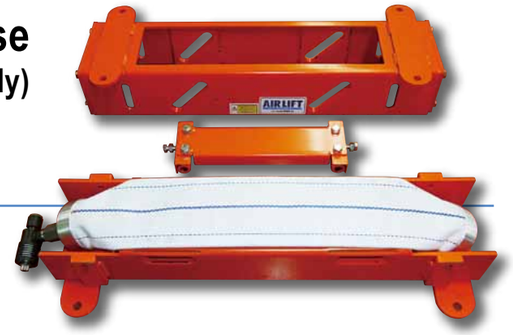

The built-in hose is a consumable part.
Replace the hose immediately if air leaks.

Parallel up-and-down type, built-in link mechanism type

The hose can be replaced without disassembling the lift.

Model Air lift
ALB-TBL-N／ALB-HB-N／ALB-TBL-WN／ALB-HB-WN

Procedure-1

Bring the air lift in a state similar to the raised state.

*Use a jack or a hoist to so that the air lift never lowers.

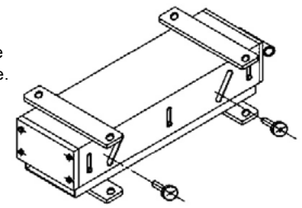

Procedure-2

Remove the covers that are bolted at the front and back of the body.

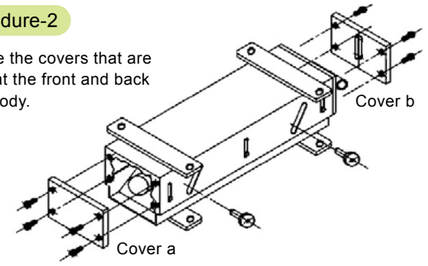

Procedure-3

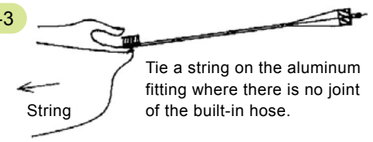

Tie a string on the aluminum fitting where there is no joint of the built-in hose.

Procedure-4

Keep the side of the aluminum fitting that is tied by a string in a bent state, and pull out the hose.

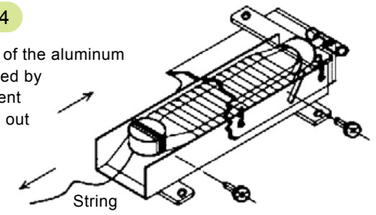

Procedure-5

Tie a string that is tied at the back of the body to a new hose, and insert the hose to the up base body while keeping the aluminum fitting bent as shown in Procedure-4. The hose must be positioned so that the clearance in the front and back becomes equal.

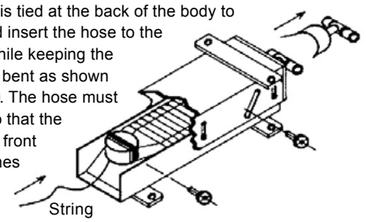

Procedure-6

Remove the string, and fasten the bolts of covers a and b.

Side guide pin type

Model Base type
ALB-SB-H／ALB-WB-H／ALB-TB／ALB-WB／ALB-SB
Roller type
ALR-PR-57H／ALR-PR-57M／ALR-PR-57W
Wheel type **ALW-PW-36**
Ball type **ALB-BB**

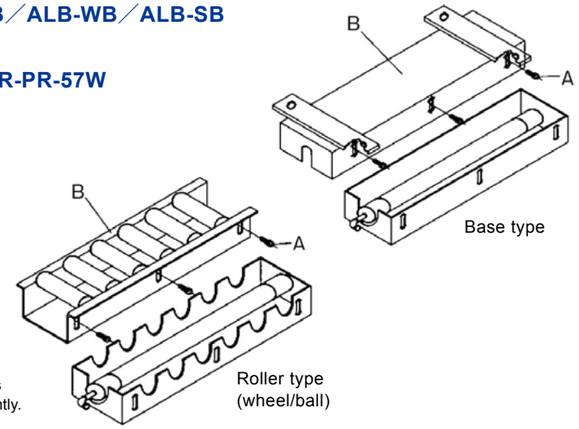

Procedure-1 A. Remove all the side guide pins (on right and left).

Procedure-2 B. Remove the upper frame upward.

Procedure-3 Replace the hose.

Procedure-4 B. Set the upper frame.

Procedure-5 A. Put a screw locking adhesive to the screws of all the side guide pins, and fasten them tightly.

QUICK DIE & MOLD CHANGE SYSTEMS

CONTENTS

Quick die & mold change systems

•Quick die & mold change system for injection molding machines	MQMC	P169
•Quick die & mold change system for sheet metal presses	MQDC	P169
•Quick die & mold change system for hot forging	MQDC	P169
•System variations		P171
•Examples		P172
•Cart equipped with batteries		P176
•Examples		P177
•Die cart & mold cart		P178
•Optional parts		P179

The MQDC and MQMC support various needs and provide an optimum quick die & mold change system in accordance with the die and mold conditions, production type, and factory layout.

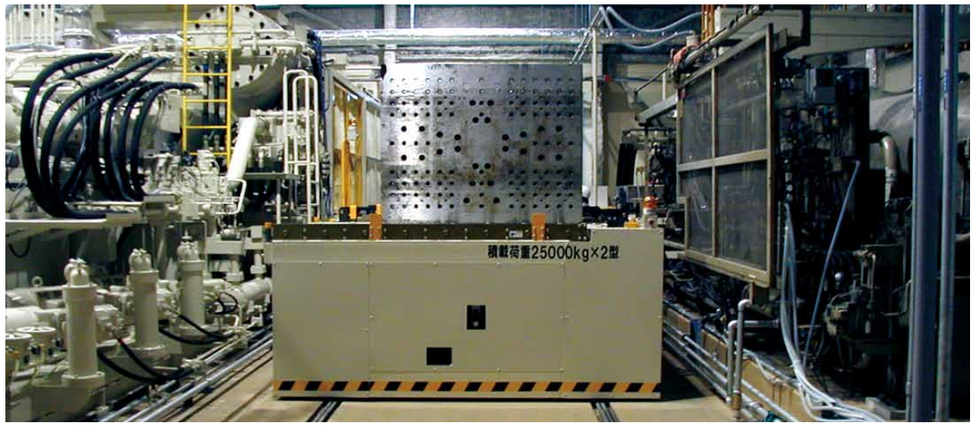

Features of Makitech quick die & mold change systems

SPEEDY

The time lost during die and mold replacement is reduced,which greatly shortens the production period!

SAFETY

Safe work is realized by eliminating danger caused by work!

EASY

Extremely simple work, labor-saving, and easy operation by one-touch buttons!

Quick die & mold change system for injection molding machines

MQMC

MAKITECH QUICK MOLD CHANGE SYSTEMS

- Injection molding machine: 850-ton class
- Mold weight: 15,000 kg
- Replacement cart that carries two molds and supports alternating stress
- Preliminary temperature adjusting machine type
- Unit type traveling rail

Quick die & mold change system for sheet metal presses

MQDC

MAKITECH QUICK DIE CHANGE SYSTEMS

- Sheet metal presses: 200-ton class
- Mold weight: 3,000 kg
- Lifting table type replacement cart that carries two molds
- Snake chain type
- Two-stage (upper and lower) table type

Quick die & mold change system for hot forging

MQDC

MAKITECH QUICK DIE CHANGE SYSTEMS

- Hot forging presses
- Mold weight: 20,000 kg
- Turn table type mold change machine
- Snake chain type

Our quick die & mold change systems are being produced at large factories that are capable of actual layouts and test operation. If we can borrow your molds at the time of witness inspection before delivery, we can hold a trial.
Feel free to contact us as we will try our best to propose a layout that meets your needs.

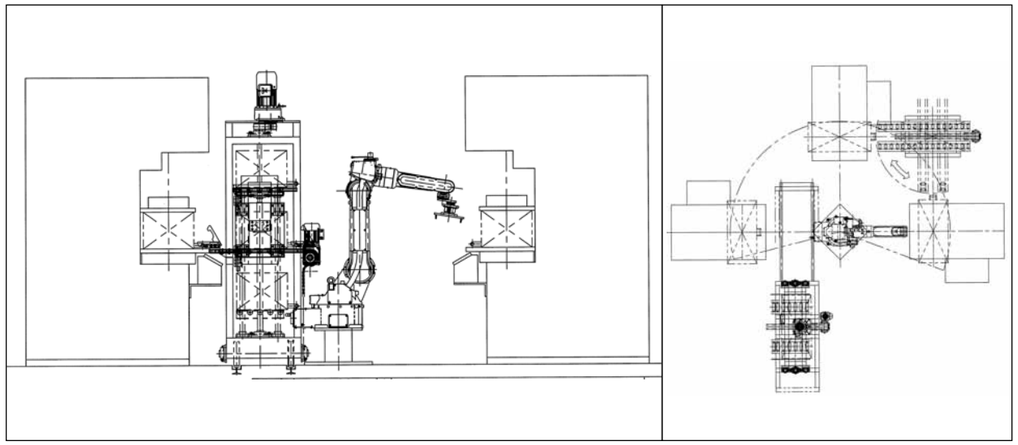

Our Design Department will construct a die & mold change system that satisfies your needs with extensive experience. We will try our best to propose the best layout if we can hear your mold conditions and production type.
Feel free to contact us if you have any questions or requests upon adopting the system.

System variations

Select a suitable layout in accordance with sheet metal presses, forging presses, and injection molding machines.

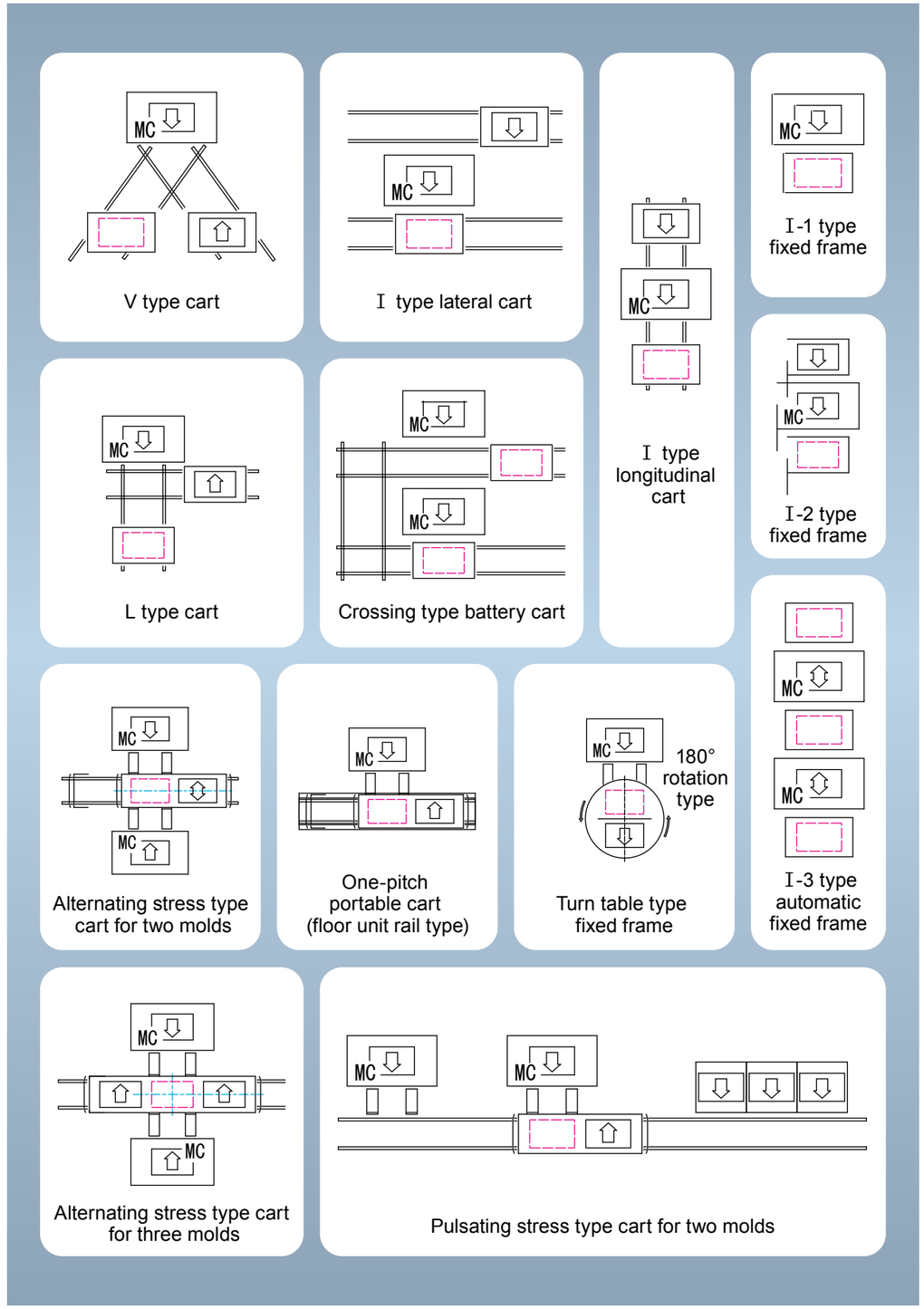

< Examples >

Cart type that carries two molds
(alternating stress type, carrying in and out molds)

For injection molding machines: 3,000 tons
Carrying in/out: Driven roller type
Mold: 30,000 kg
Feature: Rails installed on the floor

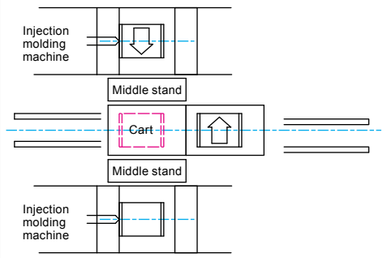

One-pitch slide table type that carries two molds

For injection molding machines: 650 tons
Carrying in/out: Snake chain type
Mold: 6,000 kg
Feature: Slide table type that is equipped with an air cylinder and carries two molds

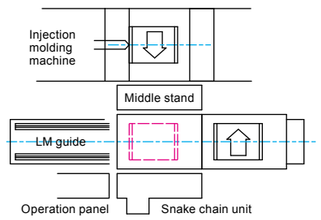

Fixed stand that carries one mold
(automatic type, carrying in and out molds)

For injection molding machines: 850 tons
Carrying in/out: Driven roller type
Mold: 15,000 kg
Feature: Molds are carried in and out automatically

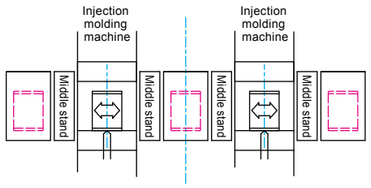

Cart type that carries two molds
(buried type rails)

For injection molding machines: 1,300 tons
Carrying in/out: Snake chain type
Mold: 15,000 kg
Feature: Snake chain unit separately placed

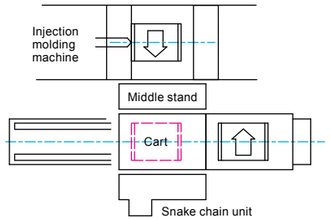

Cart type that carries two molds
(rails installed on the floor)

For sheet metal presses: 300 tons
Carrying in/out: Snake chain type
Mold: 3,000 kg
Feature: Attached with a flip-up type middle passage

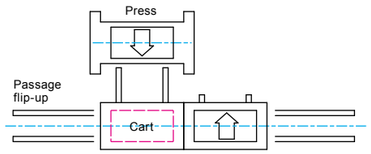

Fixed stand that carries one mold
(automatic type, carrying in and out molds)

For hot forging presses: 1,000 tons
Carrying in/out: Snake chain type
Mold: 12,000 kg
Feature: The turn table mechanism rotates molds by 90° to carry them.

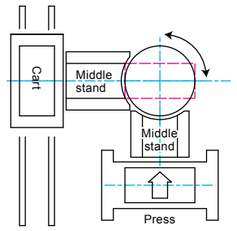

< Examples >

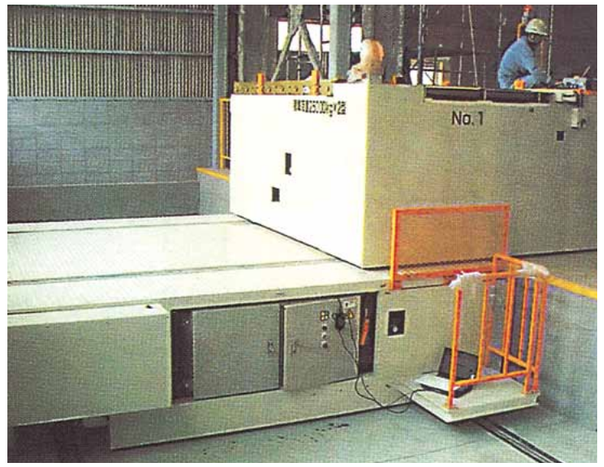

Master-slave type mold replacement cart

For injection molding machines:
Supports 650 to 3,000 tons
Carrying in/out: Snake chain type
Mold: 25,000 kg × two molds
Feature: Supports various injection molding machines (for XY running)

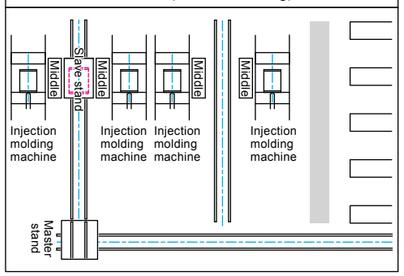

Mold replacement cart that carries three molds

For injection molding machines: 650 tons
Carrying in/out: Driven roller type
Mold: 7,000 kg × three molds
Feature: Carries three molds, alternating stress type, carrying in and out molds

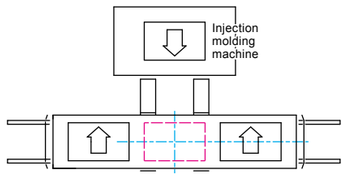

Mold transport traverser

Mold: 20,000 kg × one mold
Running: Runs on rails
Feature: Transports molds between factories

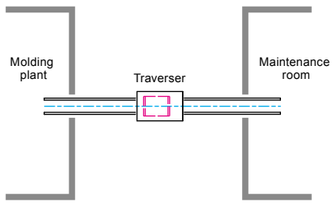

Mold replacement cart turned by hands

For injection molding machines: 200 ton
How to carry in/out: Manual snake chain type
Mold weight: MAX 3,000 kg
Running: Pushed by hands (on rails)

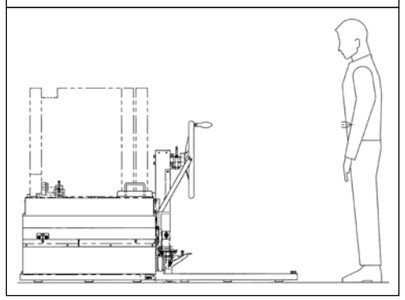

Mold replacement cart pushed by hands

For injection molding machines: 350 tons
How to carry in/out: Pushed by hands
Mold weight: MAX 3,000 kg
Running: Pushed by hands (on rails)

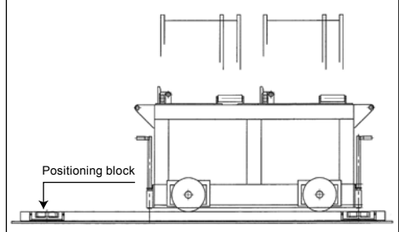

Mold replacement cart turned by hands

For injection molding machines: 350 tons
How to carry in/out: Manual snake chain type
Mold weight: MAX 3,000 kg
Running: Battery cart (rail-less)

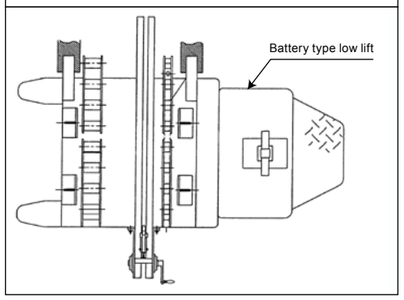

Cart equipped with batteries

Transport cart for mold replacement having two running functions and equipped with batteries

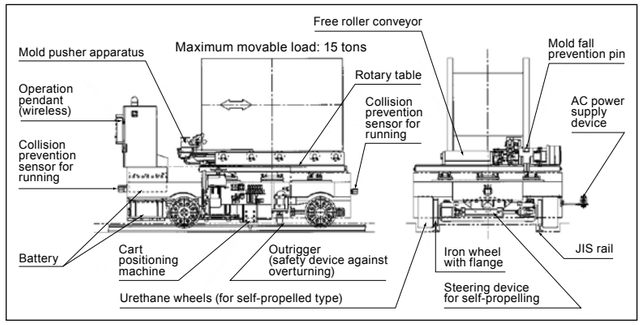

Feature (1)	Optimum for plants without cranes.	
Feature (2)	Runs on rails by power supply by a trolley duct. *AC power	Full automation can be realized when there are rails. *Automatic running/automatic type carrying in and out.
Feature (3)	Self-propelled by batteries. *DC power	The cart is operated by a pendant when it runs on the floor. *Wireless control is also supported.
Feature (4)	Equipped with a turn table that can carry molds of up to 15 tons.	Equipped with pusher apparatus.

< Examples >

Self-propelled type mold transport cart equipped with batteries

Transport of molds for injection molding machines
Movable load: MAX 20,000 kg
Feature: Riding type

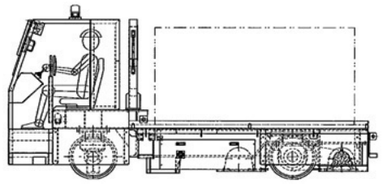

Mold transport cart equipped with batteries

Transport of molds for injection molding machines
Movable load: MAX 10,000 kg
Minimum turning radius : R 4,000 mm
Maximum speed: 30 m/min (when unloaded)
Feature: The cart is operated by pendant operation.

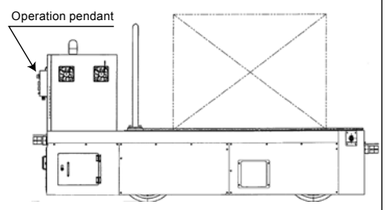

Battery cart that carries one mold

Transport of molds for presses
Movable load: MAX 3,000 kg
Feature: A battery cart that transports molds between replacement carts and storage racks.

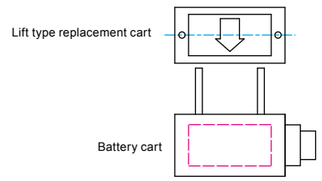

Die cart & mold cart

Picture: Die cart MAX 800 kg type

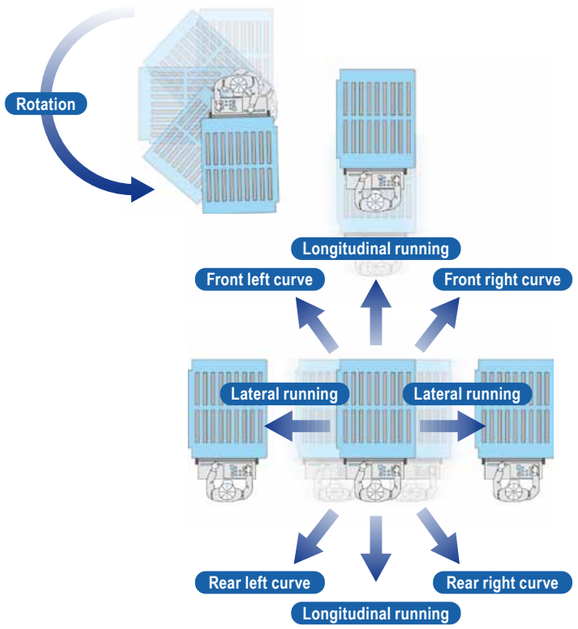

Picture: Mold cart MAX 2,000 kg type

Carts can be operated easily with the joystick at the control panel.

<Specifications>

Running method: DC motor (two-drive control)

Direction control: Multi-direction lever (joystick)

Lifting: Hydraulic cylinder or screw jack

Power: Battery 24 VDC or 48 VDC

Table: Standard roller

Maximum load: 800 kg to 2,000 kg

Optional parts

Roller inside machine for existing injection molding machines (supports drive roller)

Roller inside machine for new injection molding machines (supports free roller)

Preliminary temperature adjusting machine

Hot runner board

Operation panel (liquid crystal panel operation)

Core exchange machine (arm type)

Belt conveyor

Crossing gate

Steps, handrail, safety fence

ROBOT SYSTEM

Palletizing robot system

FANUC Robot
M-410iB

Robot hand

We will propose you an optimum hand with extensive experience to meet your request.

Standard hand

Hands for cardboard boxes and cases are attached with an adjustment mechanism and can be adjusted into various sizes.
They have a belt put on the chuck plate, and softly transfer products. Even if the product is about to fall, the chuck catches it and puts in on a pallet. Standard hands for bags and vacuum type hands are also available.

Hands for cardboard boxes and cases
A standard hand that is lightweight and low cost. High performance is realized by adopting a servo motor as standard. It firmly holds products and prevents trouble.

Hand for bags
A standard lightweight and low cost hand that is focused on bags.

Vacuum type hand
A vacuum type hand that can hold various types of products including bags, cardboard boxes, etc.

Hand for 18-liter square cans
A hand for cardboard boxes is attached with a suction pad that adsorbs and holds the works.

Drawing and operating area

■M-410iB/140H

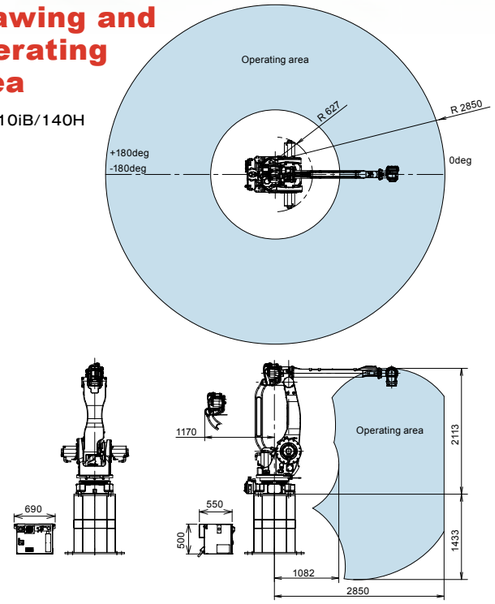

Maximum processing capability

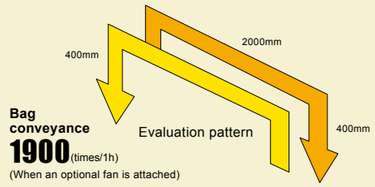

Bag conveyance
1900 (times/1h)
(When an optional fan is attached)

Rough standard for minimum height

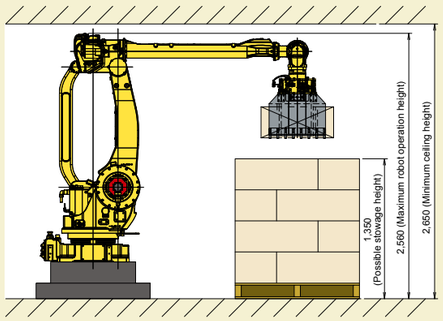

MAKITECH DRIVEN CONVEYOR

System configuration

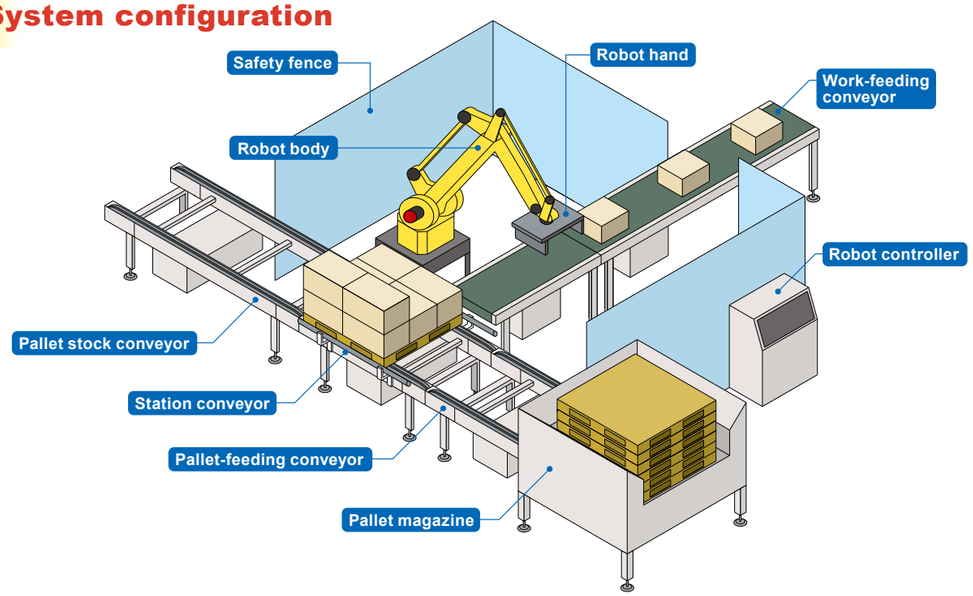

Work-feeding conveyor

A conveyor that separates and fixes a product to be stacked and gives it to the robot. It fixes products at a correct position and prevents trouble.

Model	
Work size	min 300L×300W×100H
Drive system	Chain drive
Rollers used	Ø57.2×2.1×12d (with plating)
Roller pitch	100P
Frame	[120×30×3.2t
Sprocket (roller part)	#40×10T, single
Machine length	800L～1500L
Minimum height	min 450
Transport capacity	max 100kg
Transport velocity V	max 25m/min
Motor output	0.2kW
Power	200 VAC (three phase)

Pallet magazine

It feeds an empty pallet to the pallet conveyor one by one when necessary. We will propose an optimum device when there are several pallet types.

Model	MPM-5
Compatible pallet	Resin pallets (four direction difference)
Work size	min 800 L × 800 W × 100 H (fixed)
Max. number to be stacked	5 pallets (up to a stowage height of 800 H)
Movable load	max 250kg
Drive system	Lifting: hydraulic (0.55 kW)
	Delivery conveyor: 0.2 kW × 2
	Fork opening/closing: air cylinder
Processing capability	120 pallets/hour
Minimum loading height	860H
Minimum delivery height	500H
Power	200 VAC (three phase), control 24 VDC

Pallet conveyor

A conveyor that carries pallets to be stacked by the robot and fixes them at a correct place. In addition to the chain type, there are other variations such as the roller type and the energy saving type.

Model	FDC-2
Work size	min 800L×800W×100H
Chain width	min 750
Chain used	#80 oval steel chain
Frame	Aluminum extrusion molding
Machine length	1200L～2000L
Minimum height	min 500
Transport capacity	max 1000kg
Transport velocity V	max 10m/min
Motor output	0.4kW
Power	200 VAC (three phase)

Pallet conveyor

A conveyor with records and reliability that carries pallets. The roller diameter, pitch frame dimensions, drive system, and position can be changed depending on the application.

Model	KR-765013S
Work size	min 800L×800W×100H
Drive system	Chain drive
Rollers used	Ø 76.3 × 4.3 × 20 d (no plating)
Roller pitch	150P
Frame	[150×40×4.5t
Sprocket (roller part)	#50 × 13 T, single
Machine length	1200L～2000L
Minimum height	min 500
Transport capacity	max 1,000 kg/unit
Transport velocity V	max 10m/min
Motor output	0.4kW
Power	200 VAC (three phase)

We will provide an optimum system to production plants and distribution sites with various rollers, belts, and machines.

The following shows the reference dimensions of representative standard layouts (pallet: 1,100 × 1,100).

①Automatic feeding (1 conveyor/1 pallet) Parallel L type

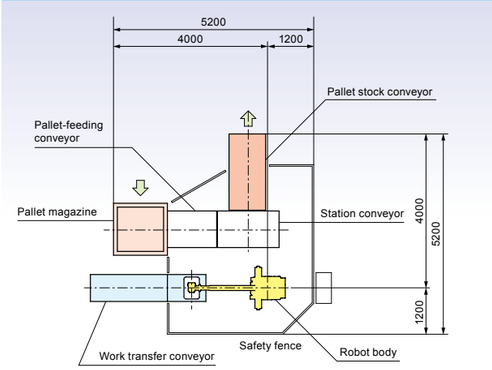

②Automatic feeding (1 conveyor/1 pallet) Vertical I type

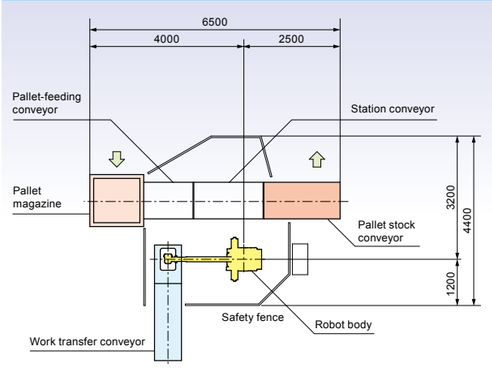

③Automatic feeding (1 conveyor/1 pallet) Vertical L type

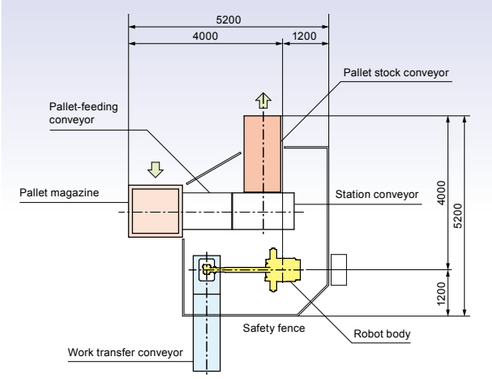

④Forward and reverse feeding (1 conveyor/2 pallets) Parallel I type

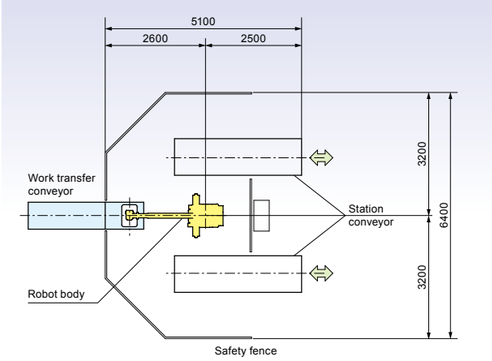

Software dedicated for palletizing

Our original software that pursued palletizing

We pursued simple operations and easy-to-see screens to provide software that is also suitable for short lot production of various types. The program created with a computer is sent to the robot controller to reduce the on-site teaching work, and it is additionally registered easily.

■Assembly patterns

Column pattern

Interlock pattern

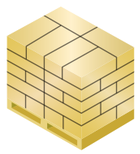

Pinhole pattern

Fist robot

Small item assembly/ casing system

Fist robots quickly arrange and mount parts. They can also assemble fine and complicated machines, using their various functions.

FANUC Robot M-2iA

FANUC Robot M-3iA

Packaged food packing system

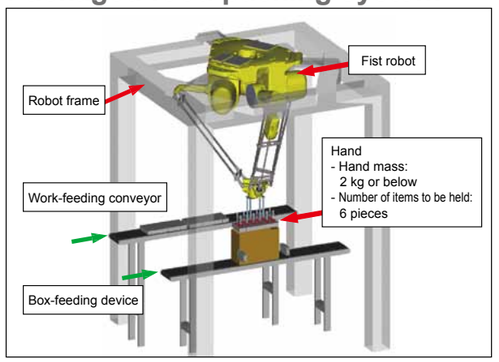

Candy box packing system

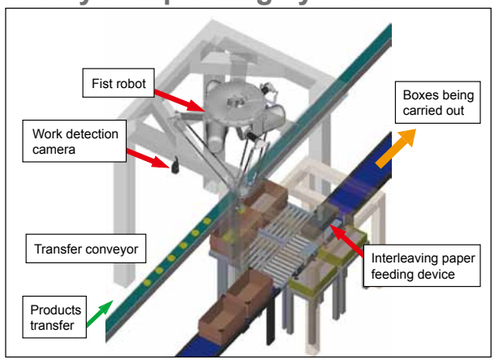

Small package packing system

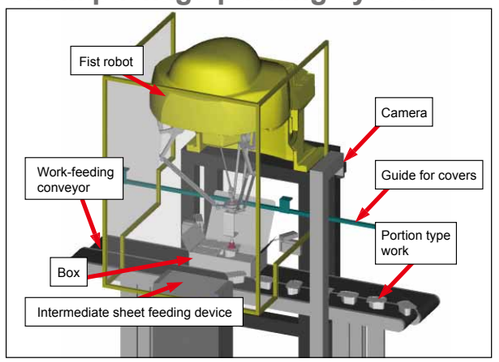

Small item bag packing system

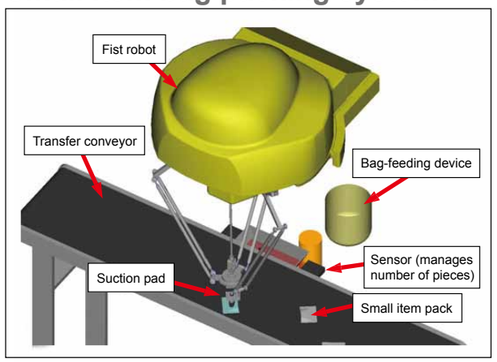

Open Up the Future of Logistics with Automatic Transport!

Automatic Guided Vehicle

AGV-GO!

Scan QR codes to watch demos of AGV 500-GO!

Load capacity
MAX:1102lbs
(500kg)

AGV 500-GO!

- Saves the cost of carrying rollboxes.
- Automatically goes under a standard rollbox, lifting up and carries it.
- Allows rollboxes to align in perfect order.

AGV 1000-GO!

- Saves the cost of carrying pallets.
- Automatically carries a pallet after it is palletized/depalletized.
- Works for flexible production lines, in accordance with robots.

Load capacity
MAX:2204lbs
(1000kg)

Pick-up Point → Storage Rack → Shipping Point

Conveyor → Pallet → Shipping Point

MAKITECH

Makitech
Loaded with energy-saving technology

GRAVITY CONVEYOR

Gravity Conveyor